STINSON

CONTENTS

Univair is the Type Certificate holder for the Stinson 108 series. We have thousands of quality parts specifically for these airplanes. Many of our parts are made on the original tooling that was used when these great aircraft were first made.

Manuals 149
Brakes 149
Cockpit • Interior 150
Control System 152
Decals • Stencils 154
Electrical System 154
Engine • Cowling • Exhaust 155
Frame 157
Fuel System 158
Landing Gear • Chassis 158
Modification Kits 160
Propellers 161
Tail Section 161
Windows • Windshields 162
Wings 163
Engine Conversion Kits 166

All parts listed are for the 1946, 1947 and 1948 models of the 108 series Stinson, unless otherwise specified. Many parts can be correctly identified by the nomenclature listed in this section. However, we suggest that you also have the Stinson parts manual (SPM) to assist you in selecting the correct parts.

Manuals

Description	Part #	Price
108 Series Parts Catalog	SPM	**$35.17**
General Service Manual	SSM	**$46.44**
Service Bulletins and Letters	SBL	**$32.46**
Stinson Specifications, ADs and STCs	SSS	**$13.52**
108 CAA Operating Limits	108CAA	**$8.11**
108-1 CAA Approved Operating Limits	1CAA	**$11.33**
108-2 CAA Approved Flight Manual	2CAA	**$8.11**
108-3 CAA Approved Flight Manual	3CAA	**$8.11**
108-1 Owner's Manual	1WM	**$18.48**
108-2 Owner's Manual	2WM	**$18.48**
108-3 Owner's Manual	3WM	**$18.48**
108-1 Seaplane Operating Limits	1SP	**$11.33**
108-2 Seaplane Flight Manual	2SP	**$8.11**
108-3 Seaplane Flight Manual	3SP	**$8.11**
108 Ski-Plane Supplement	SKS	**$2.27**
108-1 Ski-Plane Supplement	1SKS	**$2.27**
108-2/-3 Sensenich Propeller Supplement	SFMS	**$1.35**
Appendix A Supplement (165hp Conversion)	SXA	**$2.27**
Stinson Story of Aircraft Progress	SSY	**$26.15**
Stinson Time/Speed/Distance Computer	SWC	**$14.19**
Stinson Computer Instructions	SCI	**$7.97**

Brakes

Description	Part #	Price
Brake Cylinder Outlet Coil Assembly	108-5101303-0	**$434.86**
Coil Brake Line Assembly	108-5101303-2	**$589.50**
Brake Line Coil Assembly	108-5101303-4	**$278.33**
Flexible Brake Hose	108-5101304-1	**$289.38**
Parking Brake Control Support Assembly	108-5101305	**$95.18**
Support	108-5101305-2	**$155.00**
Parking Brake Control Bridle	108-5101310-6	**$132.78**
Parking Brake Control Bridle	108-5101310-8	**$46.14**
Bridle Link Assembly	108-5101312	**$42.13**
Brake Line	108-5101313-2	**$45.73**
Bracket	108-5101314	**$219.95**
Brake Line (Cleveland)	108-5102017	**$84.74**
Union	108-5102018-6	**$55.00**
Master Cylinder	108-9010075	**$1,485.06**

Ordering is easy at www.univair.com

Cockpit • Interior

Description	Part #	Price
Primer and Throttle Support Assembly, 1946	108-3021100	**$42.76**
Primer and Throttle Support Assembly, 1947-78	108-3022100	**$41.46**
Top Instrument Panel Cover, 1946-48	108-3031009-1	**$241.52**
Trim Extrusion, 64" Long, 1947-48	108-3031009-16	**$105.63**
Control Panel Connector Plate, 1947-48	108-3032022-10	**$16.28**
Door Trim Panel, Left, 1946	108-3091004-2	**$122.86**
Door Trim Panel, Right, 1946	108-3091004-3	**$122.86**
Inspection Cabin Headlining Zipper, 1946-48		
Aft	108-3091028	**$14.86**
Forward	108-3091029	**$12.17**
Safety Belt Plate, 1947-48	108-3091032	**$38.79**
Plain End Safety Belt, 1946	108-3091037	**$94.96**
Cabin Ventilator Inner Tube, 1946	108-3091056	**$116.26**
Cabin Ventilator Valve Seat Assembly, 1946	108-3091059	**$119.80**
Rear, Side and Back Panel, 1946	108-3091072	**$682.77**
Control Column Boot Clamp, 1946	108-3091078	**$81.04**
Control Column Boot Assembly, 1946	108-3091079	**$40.65**
Ventilator Cap, 1946-47	108-3091095	**$107.06**
Cabin Ventilator Valve Seat, 1947	108-3091096-0	**$179.17**
Rear Cabin Ventilator Valve Seat, 1948	108-3091096-1	**$58.95**
Cabin Ventilator Inner Tube, 1947	108-3091097-6	**$74.68**
Rear Cabin Ventilator Inner Tube, 1948	108-3091097-8	**$127.82**
Cabin Forward Side Panel, Right, 1947	108-3092092-1	**$149.06**
Cabin Forward Side Panel, Right, 1947	108-3092092-3	**$132.83**
Door Frame Scuff Plate, Left, 1946-48	108-3092112-6	**$237.65**
Door Frame Scuff Plate, Right	108-3092112-7	**$237.65**
Door Frame Trim Retainer, Left, 1947-48	108-3092113-6	**$131.86**
Door Frame Trim Retainer, Right, 1947-48	108-3092113-7	**$131.86**
Control Column Cover, 1947-48	108-3092118	**$112.98**
Forward Panel Retainer, Left, 1947	108-3092119-0	**$43.73**
Forward Panel Retainer, Right, 1947	108-3092119-1	**$43.73**
Forward Panel Retainer, Left, 1948	108-3092119-2	**$44.04**
Forward Panel Retainer, Right, 1948	108-3092119-3	**$46.26**
Rear Ventilator Cap, 1948	108-3092141-6	**$144.29**
Rear Cabin Vent Scoop, Left, 1948	108-3092145-6	**$114.89**
Rear Cabin Vent Scoop, Right, 1948	108-3092145-7	**$114.89**
Upper Rear Side Panel, Left, 1947	108-8992004	**$111.12**
Upper Rear Side Panel, Right, 1947	108-8992004-1	**$111.12**
Rear Panel Support Channel, 1947-48	108-8992008	**$62.29**
Cargo Retainer Assembly, 1947-48	108-8992019	**$132.83**
Rear Seat Bracket Cover, 1947	108-8992025-6	**$63.70**
Rear Seat Bracket Cover, 1948	108-8992025-8	**$63.70**

Air Temperature Gauge

This thermometer has both Centigrade and Fahrenheit dial graduations. It can be installed through Plexiglas® windshield or cowling on most aircraft or through the center strip in the windshield.

2716A **$82.28**

Knobs and Handles

471-060

108-3412029

A1021-A-15

Black Control Knob	471-060	**$3.70**
Red Control Knob	108-6221502-20	**$6.98**
Cabin Assist Handle, 1947-48	108-3412029	**$52.57**
Cabin Assist Handle Plate, 1947-48	108-3092115	**$9.45**
Cabin Door Inside Handle, Left or Right, 1947-48	A1021-A-14	**$96.08**
Cabin Door Outside Handle, Left, 1947	A1021-A-15L	**$120.70**
Cabin Door Outside Handle, Right, 1947	A1021-A-15R	**$120.70**
Cabin Door Outside Handle, Left, 1946	A1021-A-9L	**$120.70**

Cabin Floor

Forward Cabin Floor Carpet, 1946	108-3091044	**$97.56**
Aft Cabin Floor Carpet, 1946	108-3091045	**$121.94**
Aft Cabin Floorboard, 1946	108-3091052-2	**$132.83**
Rear Aft Floorboard Assembly, 1948	108-8992007-0	**$281.86**
Rear Aft Floorboard Assembly, 1947	108-8992007-2	**$821.39**
Forward Rear Floor Assembly, 1948	108-8992007-30	**$135.27**
Aft Cabin Floor Carpet, 1947	108-3092045	**$134.84**
Forward Cabin Floorboard, Left, 1946-48	108-3092052-28	**$314.59**
Forward Cabin Floorboard, Right, 1946-48	108-3092052-29	**$297.01**
Intermediate Cabin Floorboard, Right, 1947-48	108-3092052-3	**$61.28**
Intermediate Cabin Floorboard, Right, 1948	108-3092052-30	**$49.92**
Intermediate Cabin Floorboard, Left, 1947	108-3092052-4	**$77.51**

Glove Box

Glove Box Door Assembly, 1946	108-3031018	**$93.22**
Glove Box Door Assembly, 1947-48	108-3032018	**$156.53**
Glove Box Door Catch Spring, 1947-48	108-3032038	**$33.01**
Glove Box, 1947-48	108-3092053	**$115.11**
Glove Box Knob, Black	471-060	**$3.70**

Baggage Compartment

Baggage Compartment Curtain, 1947-48	108-3002261-0	**$246.00**
Baggage Door Hinge, 1947-48	108-3002264	**$35.99**
Baggage Compartment Floor Assembly, 1947	108-3002266-2	**$509.37**
Baggage Compartment Front Wall, 1947	108-3002267-2	**$413.98**
Baggage Door Hold Back Spring, 1947-48	108-3002268	**$44.89**
Baggage Door Hold Back Spring Spacer, 1947-48	108-3002270	**$4.53**
Baggage Door Frame Fabric Retainer, 1947-48	108-3002273	**$91.05**
Upper Angle Support, 1947-48	108-3002274	**$30.95**
Lower Angle Support, 1947-48	108-3002275	**$40.45**
Baggage Tie Down Strap, Buckle End, 1948	108-3002281-6	**$16.83**
Baggage Tie Down Strap, Plain End, 1948	108-3002281-8	**$16.83**

Oleo Strut Housing Cover

- Applicability: Stinson 108 Series

108-3091011 ..... **$456.68**

Seats

Rear Seat Tube, 1946-48	108-3091001-8	**$129.93**
Bottom Cushion, Left, 1946	108-3091017-32	**$280.62**
Bottom Cushion, Right, 1946	108-3091017-33	**$280.62**
Front Seat Back, Left, 1946	108-3091017-34	**$339.03**
Front Seat Back, Right, 1946	108-3091017-35	**$337.44**
Rear Seat Bottom Cushion, 1946	108-3091023	**$234.24**
Rear Seat Back Cushion, 1946	108-3091025	**$399.66**
Rear Seat Bottom Cushion, 1948	108-3092135	**$235.68**
Rear Front Seat Support Assembly, 1946-48	108-3092007	**$317.98**
Front Seat Bottom Cushion, Right, 1947	108-3092017-33	**$292.74**
Rear Seat Back Cushion, Right, 1948	108-3092143-3	**$321.27**

Placards

- Descriptions, images, and sizes of placards can be found on www.univair.com

Operating Limitations Placard, 1946	108-8741001-6	**$25.39**
Baggage Placard, 1946	108-8741001-8	**$20.61**
Tab Control Placard, 1946-47	108-8742000	**$37.20**
Baggage Placard, 1947	108-8742001-12	**$22.48**
Station Wagon Baggage Placard, 1947	108-8742001-16	**$66.05**
Operating Limitations Placard, 1948	108-8742001-20	**$25.93**
Baggage Placard, 1948	108-8742001-22	**$12.05**
Station Wagon Baggage Placard, 1948	108-8742001-24	**$27.14**
Cabin Baggage Placard, 1947-48	108-8742001-26	**$27.27**
Operating Limitations Placard, 1947	108-8742001-6	**$36.95**
Rudder and Elevator Trim Placard, 1948	108-8742200	**$74.44**

1946 Standard and Basic Blind Flight Instrument Panel

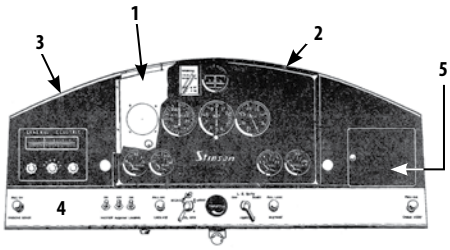

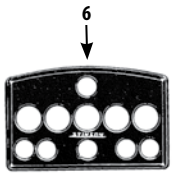

1) Flight Panel Assembly	108-3031021	**$241.92**
2) Indirect Instrument Panel Assembly	108-3031002	**$56.12**
3) Main Panel Assembly	108-3031003	**$423.68**
4) Control Panel Assembly	108-3031004	**$76.98**
5) Glove Box Door Assembly	108-3031018	**$93.22**
6) Basic Blind Flight Indirect Panel Assembly	108-8931005	**$309.76**

1947-48 Standard and Basic Blind Flight Instrument Panel

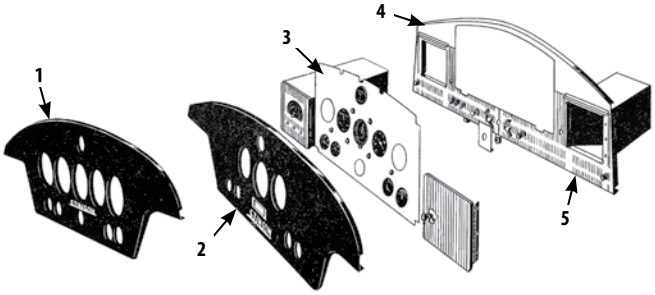

1) Basic Blind Flight Indirect Panel Assembly		
1947	108-8932005-0*	**$149.06**
1948	108-8932005-1	**$149.06**
2) Indirect Instrument Panel Assembly		
1947	108-3032002-0*	**$165.06**
1948	108-3032002-1*	**$165.06**
3) Flight Panel Assembly, 1947-48	108-3032021-8	**$352.81**
4) Main Panel Assembly, 1947-48	108-3032003	**$305.74**
5) Control Panel Assembly, Right Half, 1947-48	108-3032022-8	**$331.69**

* These parts are original Stinson inventory, and sold in an "AS IS" condition

1946-1948 Advanced Blind Flight Instrument Panel

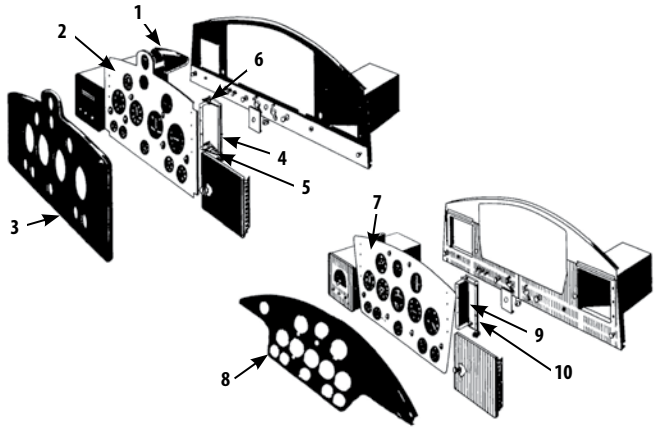

1) Direction Indicator Cover, 1946	108-8931006	**$99.42**
2) Direction Panel Assembly, 1946	108-8931003-2	**$107.35**
3) Indirect Panel Assembly, 1946	108-8931003-4*	**$232.56**
4) Support Assembly, 1946	108-8931003-10	**$78.05**
5) Shock Mounts, 1946	100PL-4	**$14.50**
6) Bracket Assembly, 1946 (8931003-14)	108-8932019-0	**$84.25**
7) Direct Panel Assembly, 1947-1948	108-8932021-1	**$284.37**
8) Indirect Panel Assembly, 1947-1948	108-8932022-0/-1	**N/A**
9) Instrument Panel Bracket Assembly, 1947-48	108-8932019-0	**$84.25**
10) Instrument Panel Bracket Assembly, 1947-48	108-8932020	**$229.58**

* These parts are original Stinson inventory, and sold in an "AS IS" condition
N/A = Not available

Full Gyro Instrument Panels • 1946-48

This shock-mounted floating panel is simple to install. Both kits consist of the following parts: one instrument mounting panel, one false panel, two supports, and two brackets.

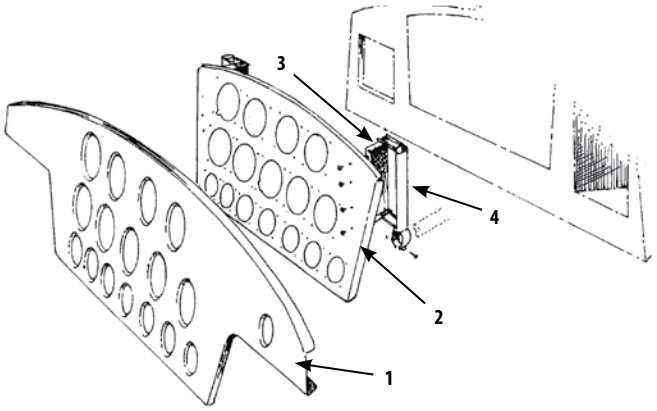

This panel uses the old style 4⅞" artificial horizon

Full Gyro Instrument Panel Kit	108-8932007K	**$1,512.09**
1) Indirect Panel Assembly	108-8932006-0	**$564.63**
2) Direct Panel Assembly	108-8932007-0	**$321.81**
3) Instrument Panel Bracket	108-8932019-0	**$84.25**
4) Instrument Panel Support	108-8932020	**$229.58**

This panel uses the smaller 3⅛" artificial horizon

Full Gyro Instrument Panel Kit	108-8932007-1K	**$1,512.09**
1) Indirect Panel Assembly	108-8932006-1	**$430.50**
2) Direct Panel Assembly	108-8932007-1	**$268.43**
3) Instrument Panel Bracket	108-8932019-0	**$84.25**
4) Instrument Panel Support	108-8932020	**$229.58**

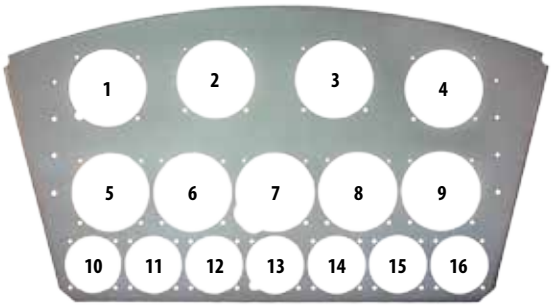

The panel above shows the locations of the following instruments:

Top Row
1) VOR Indicator, 2) Artificial Horizon, 3) Directional Gyro, 4) ADF Compass

Middle Row • All 3⅛ Inch Instruments
5) Air Speed Indicator, 6) Turn and Bank, 7) Sensitive Altimeter, 8) Rate of Climb, 9) Tachometer

Bottom Row • All 2¼ Inch Instruments
10) Oil Pressure Gauge, 11) Oil Temperature Gauge, 12) Suction Gauge, 13) Clock, 14) Cylinder Head Temperature Gauge, 15) Fuel Quantity Gauge, 16) Ammeter

See our website for available instruments and gauges.

Control System

Description	Part #	Price
Elevator Tab Control Casing Assembly, 1946-48	108-2241602	**$183.78**
Elevator Tab Mechanism Housing, 1946-48	108-2241603	**$114.37**
Elevator Tab Control Shaft, 1946-48	108-2241606	**$121.90**
Elevator Trim Tab Control Shaft, 1946-48	108-2241608	**$490.17**
Elevator Trim Tab Mechanism Rod, 1946-48	108-2241610	**$215.82**
Vertical Stabilizer, 1946-47	108-2311000	**$4,220.95**
Rudder Steering Arm, 1946-48	108-2583	**$164.65**
Rudder Assembly, Includes Tab, 1948	108-2602100	**$4,285.87**
Rudder Assembly, 1946-47	108-2611000	**$3,535.52**
Tube Assembly, Left, 1948	108-3041000-30	**$65.34**
Right	108-3041000-32	**$65.34**
Control Wheel Hub Casting, 1946	108-3041121	**$12.06**
Control Column Shaft Pulley, Left, 1946-48	108-3041204-0	**$136.34**
Right	108-3041204-2	**$136.34**
Fairlead Pulley, 1946-48	108-3041209	**$21.73**
Flap Handle Lever Adjustment Rack, 1946-48	108-3041501	**$51.22**
Flap Control Handle Latch, 1946-48	108-3041502	**$11.94**
Flap Control Handle Release, 1946-48	108-3041503	**$277.47**
Flap Pushrod Assembly, 1946-48	108-3041504	**$292.62**
Flap Control Handle Tube, 1946-48	108-3041506	**$369.63**
Elevator Tab Control Shaft Bushing, 1946-47	108-3041603	**$7.83**
Control Wheel Shaft Assembly, 1947-48	108-3042153	**$162.76**
Trim Control Pulley, 1947-48	108-3042424-6	**$142.90**
Trim Control Pulley, 1947-48	108-3042424-8	**$103.28**
Rudder Bungee Kit, 1946-47	108-3042450	**$2,905.56**
Elevator/Rudder Trim Control Sleeve, 1947-48	108-3042457-6	**$139.00**
Elevator/Rudder Trim Control Shaft, 1947-48	108-3042458-6	**$51.65**
Elevator/Rudder Tab Control Support, 1948	108-3042459-2	**$340.56**
Rudder Trim Spring, 1947	108-3042462-6	**$41.73**
Trim Control Pulley, 1947	108-3042463-6	**$86.34**
Rudder Brake Spring, 1948	108-3042627-6	**$17.15**
Rudder Bar Assembly, Right, 1948	108-3942408	**$1,932.07**
Dual Brake Link Assembly, 1948	108-3942410-2	**$98.01**
Escutcheon, 1946-48	108-8041000-1	**$29.32**
Flap Return Spring, 1946-48	108-8441000	**$77.26**
Flap Handle Release Spring, 1946-48	108-8441001	**$6.76**
Control Shaft Support Bushing, 1946-47	108-8611000	**$24.77**
Bellcrank Bushing, 1947-48	108-8612003	**$16.27**
Universal Joint, 1946-48	12PF-744	**$514.80**

Throttle and Control Cables

Friction Throttle, 1946-1948	108-6222501-0	**$413.05**
Vernier Throttle	108-6222501-1	**$231.52**
Carburetor Heat Control, 44" Length, Locking, Black Knob (5101306, A700-BL-0440)	A700-10-0440	**$75.43**
Stinson Control, 44" Length	108-6221502	**$126.52**
Carburetor Mixture Control, 42" Length	108-6221502-1	**$204.69**
Cabin Heat Control, 1946, 62" Length	108-6221502-2	**$117.61**
Cabin Heat Control, 1947-1948, 58" Length	108-6221502-3	**$105.63**
Brake Control, 28" Length	108-6221502-4	**$138.53**

Control Cables

- All cables are priced and sold individually

Aileron

Aileron Idler Cable, 2 required
Galvanized ..... 108-1141206 ..... **$142.76**
Stainless ..... 108-1141206S **$190.20**
Aileron Control Cable, 2 required
Galvanized ..... 108-1141208 ..... **$115.00**
Stainless ..... 108-1141208S **$172.06**
Aileron Idle Cable (in frame), 1 required
Galvanized ..... 108-3041118 ..... **$77.44**
Stainless ..... 108-3041118S **$103.24**
Control Column Cable, Left Half, 1 required
Galvanized ..... 108-3041123-6 ..... **$183.73**
Stainless ..... 108-3041123-6S **$186.97**
Control Column Cable, Right Half, 1 required
Galvanized ..... 108-3041123-7 ..... **$183.73**
Stainless ..... 108-3041123-7S **$186.97**

Elevator

"Up" Elevator Cable, 1 required
Galvanized ..... 108-3041305-10 ..... **$142.32**
Stainless ..... 108-3041305-10S **$154.13**
"Down" Elevator Cable, 1 required
Galvanized ..... 108-3041305-11 ..... **$148.67**
Stainless ..... 108-3041305-11S **$154.13**

Elevator Trim

Elevator Tab, Cabin to Control Cable, S/N 1 to 2249, 1 required
Galvanized ..... 108-3041615-0 ..... **$99.63**
Stainless ..... 108-3041615-0S **$138.21**
Elevator Tab, Cabin to Control Cable, S/N 2250 and up, 1 required
Galvanized ..... 108-3041615-1 ..... **$117.61**
Stainless ..... 108-3041615-1S **$140.98**

Flap

Flap Control Cable, 2 required
Galvanized ..... 108-1141506 ..... **$118.91**
Stainless ..... 108-1141506S **$133.92**
Upper Flap Control Cable (in frame), 1 required
Galvanized ..... 108-3041511 ..... **$113.27**
Stainless ..... 108-3041511S **$149.34**

Rudder

Rudder Cable, 1946-1947, 2 required
Galvanized ..... 108-3041003-0 ..... **$139.45**
Stainless ..... 108-3041003-0S **$182.84**
Rudder Cable, 1948, 2 required
Galvanized ..... 108-3041003-2 ..... **$177.11**
Stainless ..... 108-3041003-2S **$174.69**

Rudder Trim

Rudder Trim Cable, S/N 2250 to 3499*, 2 required
Galvanized ..... 108-3042620 ..... **$104.20**
Stainless ..... 108-3042620S **$114.71**
Rudder Trim Cable, S/N 2250 to 3499*, 1 required
Galvanized ..... 108-3042622 ..... **$137.60**
Rudder Trim Cable, 108-3, S/N 3500 and up, 1 required
Galvanized ..... 108-3042426 ..... **$170.73**
Stainless ..... 108-3042426S **$177.34**

* Used with rudder bungee system

Stinson Control Surface Bearing

Control Surface Bearing ..... CS3906 ..... **$38.74**
Felt Seal ..... 108-8001001 ..... **$2.58**

Tachometer Cable

- 36 inch length

Recording ..... TACH-36 ..... **$154.00**
Non-Recording ..... TACH-36NR **$154.00**

Rudder Control

Rudder Pedal
Copilot, 1947 ..... 108-3042405 ..... **$38.21**
Pilot, 1947 ..... 108-8542013-6 ..... **$167.59**
Pilot and Copilot, 1948 ..... 108-8542013-6 ..... **$167.59**
Copilot, 1946 ..... 108-3041405 ..... **$26.56**
Rudder Control Drive Shaft, 1948 ..... 108-3042428 ..... **$88.07**
Rudder Tab Mechanism Rod Assembly, 1948 ..... 108-3042429 ..... **$179.17**
Copilot Rudder Pedal Return Spring, 1948 ..... 108-3042431-6 ..... **$6.45**
Rudder Bar Assembly, Left, 1946 ..... 108-3041406 ..... **$214.13**
Rudder Bar Assembly, Right, 1946 ..... 108-3041408 ..... **$214.13**
Rudder Pedal Torque Tube Bearing, 1946-48 ..... 108-3041411 ..... **$226.05**
Rudder Tab Control Pulley, 1948 ..... 108-3041612 ..... **$42.76**
Rudder Bar Return Spring, 1946-48 ..... 108-3041002 ..... **$28.47**
Rudder/Elevator Tab Control Spindle, 1947 ..... 108-3042452-6 ..... **$145.66**
Rudder Trim Cable Clamp Fitting, 1947 ..... 108-3042619-6 ..... **$14.75**
Rudder Trim Control Shaft Assembly, 1948 ..... 108-3042430 ..... **$570.47**
Rudder Trim Cable Clamp, 1947 ..... 108-3042451-6 ..... **$34.34**
Rudder Trim Frame Assembly, 1947 ..... 108-3042453 ..... **$292.27**
Rudder Trim Control Knob, 1947-48 ..... 108-3042456-8 ..... **$66.38**
Rudder Trim Control Arm Assembly, 1947
Left ..... 108-3042461-0 ..... **$246.55**
Right ..... 108-3042461-1 ..... **$246.55**

Dual Brake Kit

Available for Stinson 108 series. Provides brake actuation from both front seats (required item for student instruction). Simple installation; no welding. Complete kit with drawing. See our website for complete list of all parts and hardware included in this kit.

- Kit Weight: 11.10 lbs

Dual Brake Kit ..... 108-3942001 ..... **$3,952.69**

Elevator Control

Elevator Bellcrank, 1946-48 ..... 108-3041303 ..... **$146.54**
Elevator Push-Pull Tube Assembly, 1946-48 ..... 108-3041304 ..... **$463.60**
Elevator Control Stop, 1946-48 ..... 108-3041306 ..... **$207.66**
Elevator Tab Front Control Pulley, 1946-1947 ..... 108-3041601 ..... **$42.76**
Elevator Tab Control Crank Arm Assembly
1946-47, S/N 1 to 2249 ..... 108-3042610 ..... **$46.49**
1947-48, S/N 2250 and up ..... 108-3042618-2 ..... **$490.96**
Elevator Control Arm Stop, 1946-48 ..... 108-3041602-8 ..... **$17.29**
Elevator Control Shaft, 1946-47, S/N 1 to 2249 ..... 108-3041604 ..... **$40.41**
Elevator Tab Control Shaft,1946-48 ..... 108-3041606 ..... **$76.44**
Elevator Tab and Rudder Trim Control
Support Assembly, 1947, S/N 2250 and up ..... 108-3042459-0 ..... **$259.20**
Pulley Assembly, 1947-48, S/N 2250 and up ..... 108-3042460-2 ..... **$983.26**
Elevator Tab Control
Front Support Assembly, 1946-47, S/N 1 to 2249 ..... 108-3041608 ..... **$42.27**
Front Pulley Assembly, 1946-47, S/N 1 to 2249 ..... 108-3041609 ..... **$135.27**
Elevator Tab Control Rear Bushing, 1946-48 ..... 108-3041617 ..... **$25.99**

Decals • Stencils

For 108, S/N 119 to 742
"Voyager 150", Left Side, Mask ..... 108-3091048-6 ..... **$71.95**
"Voyager 150", Right Side, Mask ..... 108-3091048-7 ..... **$71.95**

Stinson "Voyager 150"
Stencil ..... 108-3091048-37 ..... **$18.41**

For 108-1, S/N 743 to 2249
"Voyager 150", Left Side, Mask ..... 108-3092048-6 ..... **$71.95**
"Voyager 150", Right Side, Mask ..... 108-3092048-7 ..... **$71.95**

For 108-2 and 108-3, S/N 2250 and up
"Stinson Voyager" Stencil ..... 108-3092126 ..... **$32.00**

For 108-2 and 108-3, S/N 2250 and up
"Stinson Flying Station Wagon", Stencil ..... 108-8992034 ..... **$59.08**

"Bow and Arrow" Tail Fin Stencils
Left Stencil ..... 108-3091039-6 ..... **$44.44**
Right Stencil ..... 108-3091039-7 ..... **$44.44**

Electrical System

Description	Part #	Price
Landing Light Lens Retainer, 1946-48	108-1111086	**$27.86**
Landing Light Lens Retainer, Left, 1946-48	108-1111087	**$23.53**
Landing Light Lens, 1946-48	108-1111091	**$77.48**
Antenna Mast Assembly, 1946-47	108-2311014	**$12.17**
Rudder Light Bracket, 1946-48	108-2661001	**$76.75**
Radio Support Assembly, 1946	108-3031501	**$10.84**
Radio Loudspeaker Baffle Board, 1946	108-3031503	**$70.24**
Radio Loudspeaker Grille, 1946	108-3031504	**$12.17**
Loop Antenna Spring, 1946-48	108-3031506-0	**$2.69**
Radio Support Assembly, 1947-48	108-3032501	**$129.50**
Loop Antenna Assembly, 1947	108-3032507	**$32.48**
Mast Antenna Bracket, 1947	108-3032521	**$14.08**
Mast Antenna Bracket, 1948	108-3032525	**$3.99**
Battery Box Cover, 1946-47	108-3061001	**$264.15**
Battery Box Assembly, 1946-47	108-3061002	**$516.30**
Battery Tie Down Rod, 1946-47	108-3061004	**$35.27**
Battery Ground Cable, 1946-47	108-3061008-10	**$12.39**
Battery Ground Cable, 1948	108-3062012	**$64.79**
Fuel Gauge Sending Unit, 1946-48	7740-313	**$402.49**

Bendix Ignition Switch

- With "Start" position
- For all light planes

Switch ..... 10-357200-1 ..... **$661.42**
Placard for switch ..... 10-126676 ..... **$5.10**

Single Pole Solenoid Battery Relay

- Use as master solenoid on Stinson 108 series
- Normally open
- Supersedes part number 70-918

Battery Relay ..... 70-111226-5 ..... **$35.80**

Concorde Batteries

- Applicability: Stinson 108, 108-1, 108-2, 108-3, 108-5
- Valve regulated sealed lead acid batteries

12 Volt, 29 Amp Hour ..... RG-35A **$468.00**

Engine • Cowling • Exhaust

To insure the proper selection of parts, we suggest that you use your Stinson parts manual (SPM) with this catalog. Please include your aircraft model and serial number when ordering.

Description	Part #	Price
Magneto Noise Filter, 1946-48	A293	**$190.14**
Aeromatic Baffle Kit, 1946-48	4086	**$398.43**
Cowl Support Tube Clip, 1947-48	108-6022423	**$45.59**
Generator Blast Tube, 1946-48	108-6201000-28	**$32.64**
Engine Oil Drain Tube, 1947-48	108-6201011-6	**$92.35**
Oil Drain Valve Block 'U' Bolt, 1947-48	108-6201012	**$76.89**
Engine Oil Drain Valve Block, 1947-48	108-6201013	**$93.85**
Duct, 7 inches, 1946-48	108-6202000-12	**$34.03**
Valve to Strainer Tube Assembly, 1946-47	108-6221100-52	**$83.70**
Side Cooling Baffle, Right, 1946-48	108-6221202	**$136.44**
Side Cooling Baffle, Left, 1946-48	108-6221203	**$162.82**
Rear Cooling Baffle Assembly, 1946-48	108-6221204	**$640.07**
Front Cooling Baffle Assembly, Left, 1946	108-6221206-0	**$240.46**
Front Cooling Baffle Assembly, Left, 1947	108-6221206-1	**$193.93**
Magneto Cooling Tube, Left, 1946-48	108-6221213-16	**$41.48**
Magneto Cooling Tube, Right	108-6221213-17	**$41.48**
Front Cooling Baffle Assembly, Right, 1946-47	108-6221216	**$103.94**
Front Center Cooling Baffle, 1946-47	108-6221217	**$29.75**
Exhaust Tailpipe Support Clamp, Left, 1946	108-6221705-0	**$65.55**
Exhaust Tailpipe Support Clamp, Right, 1946	108-6221705-1	**$68.53**
Tailpipe Support Angle, Left, 1946-48	108-6221709-6	**$14.70**
Tailpipe Support Angle, Right, 1946-48	108-6221709-7	**$13.27**
Exhaust Tailpipe Support Strap, 1946-48	108-6221710	**$103.42**
Carburetor Air Box Assembly, 1946-47	108-6221807	**$680.42**
Flexible Hose Attaching Collar, 1946	108-6221812-6	**$17.62**
Cabin Heat Deflector Spring, 1946	108-6221814	**$19.21**
Air Induction Cuff Clamp, 1946-47	108-6221815	**$24.15**
Cabin Heat Deflector, 1946	108-6221816	**$12.17**
Carburetor Air Box Gasket, 1946-47	108-6221817	**$15.18**
Tank to Valve Tube Assembly, Right, 1947-48	108-6222100-10	**$286.02**
Valve to Strainer Tube Assembly, 1947-48	108-6222100-52	**$226.54**
Tank to Valve Tube Assembly, Left, 1947-48	108-6222100-8	**$402.43**
Shroud Attach Channel, 1946-48	108-6221704	**$72.53**
Front Cooling Baffle, 1947-48	108-6222219-0	**$434.72**
Tailpipe Exhaust Clamp, 1947-48	108-6222715	**$92.70**
Carburetor Air Box Assembly, 1947-48	108-6222807	**$1,644.02**
Air Induction Cuff Clamp, 1947-48	108-6222815	**$33.63**
Carburetor Air Box Gasket, 1947-48	108-6222817	**$10.56**

Aluminum Nose Cowl

- Applicability: Stinson 108 through 108-3
- Grilles sold separately

Nose Cowl ..... 108-6021401-52..... **$1,751.48**
Left Grille ..... 108-8541008-7..... **$532.69**
Right Grille ..... 108-8541008-6..... **$433.45**

Carburetor Heat Shroud

- Applicability: 1946-48 Stinson 108 Series with Franklin engine

108-6221210-2 ..... **$489.61**

Cabin Heat Shroud

- Applicability: Stinson 108-1, -2 and -3
- Fits serial numbers 744 and up

108-6222209 ..... **$548.91**

Exhaust System

Serial Numbers 1 to 3109

1) Muffler ..... 108-6221702 ..... **$1,260.75**
2) Perforated Tube ..... 108-6221708 ..... **$305.25**
4) Tailpipe, Left ..... 108-6221711-0 ..... **$455.09**
5) Tailpipe, Right ..... 108-6221711-1 ..... **$500.59**

Serial Numbers 3110 and up

1) Muffler ..... 108-6222702 ..... **$1,253.64**
3) Perforated Tube ..... 108-6222708 ..... **$305.25**
4) Tailpipe, Left ..... 108-6222711-0 ..... **$416.19**
5) Tailpipe, Right ..... 108-6222711-1 ..... **$395.67**

Bottom Cowl Assembly

- Does not include filter plate

108-6021401-70 ..... **$3,720.18**

Spinner Assemblies

- Complete spinner assemblies for Stinsons with wood or metal propellers

Wood Propeller Spinner Assembly ..... 108-6921000-1 ..... **$909.16**
Metal Propeller Spinner Assembly ..... 108-6921000-2 ..... **$1,009.10**
Wood Propeller Spinner Dome ..... 108-6921000-6 ..... **$584.91**
Metal Propeller Spinner Dome ..... 108-6921000-30 ..... **$578.11**
Wood Propeller Moisture Plate .....U17577 ..... **$99.18**
Propeller Bolts .....U17662 ..... **$34.87**
Wood and Metal Propeller Front Plate ..... 108-6921000-20 ..... **$241.45**
Wood and Metal Propeller Rear Plate ..... 108-6921000-22 ..... **$166.12**

Note About Wooden Propeller Installation

Due to the different hub contour of the various propellers approved on the 108 series aircraft, the FAA approved blueprint calls out "trim front bulkhead to clear propeller." This may be done with standard sheet metal shears and then the edge sanded smooth to prevent cracks in the bulkhead.

Top Cowl Assembly

- Applicable to all 108 series Stinsons
- Includes right and left top cowls and center hinge assembly

Top Cowl Assembly ..... 108-6021401-26 ..... **$2,284.66**
Left Side Only..... 108-6021401-26L **$1,391.32**
Right Side Only ..... 108-6021401-26R **$1,391.32**

Engine Mount

- Applicability: All Franklin 150, 165 and 180hp engines

Engine Mount .....108-6212000-1 ..... **$2,750.98**

Engine Cowl Lever Assembly

Cowl Fastener Assembly
108-6021401-22 ..... **$109.39**
Cowl Fastener Pin
99836 ..... **$1.68**
Cowl Fastener Receptacle..... 99947P130 ..... **$6.46**
Receptacle Cup..... 108-6021401-36 ..... **$32.83**

Air Induction Cuffs

For 108, 108-1, 108-2 150hp,
S/N 1 to 2249..... 108-6221801 ..... **$185.65**
For 108-2, 108-3 165hp,
S/N 2250 and up..... 108-6222801 ..... **$185.65**

Carburetor Air Filter

- Applicability: Franklin 150-165hp engines
- Excludes the 6221805-8 bottom close out strip

Carburetor Air Filter..... 108-6221805 ..... **$85.43**
Close Out Strip ..... 108-6221805-8 ..... **$25.30**

Spinner Dome Installation Instructions

Used with McCauley 1A170 MET-L-PROP or Sensenich 74DR-0-XX on Stinson 108 series aircraft.

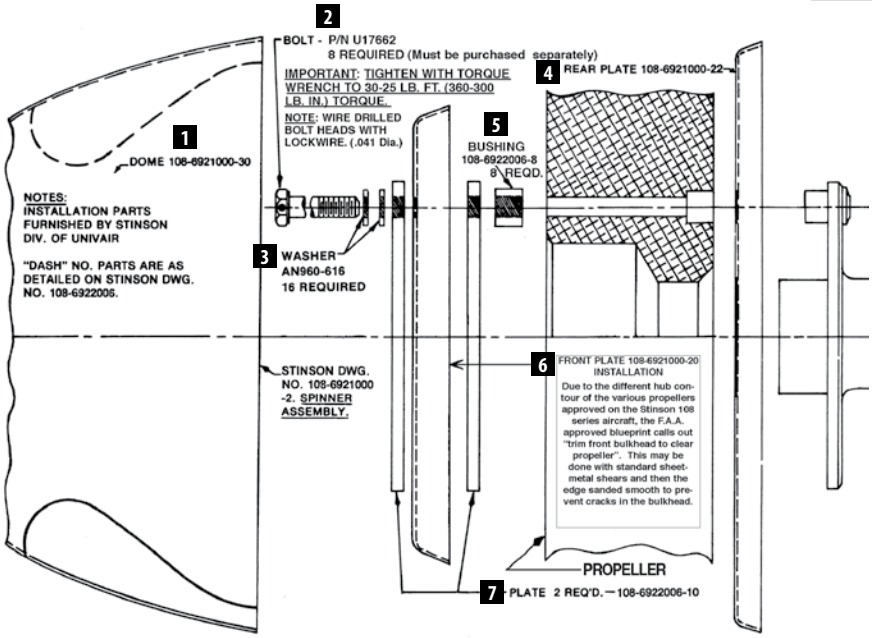

	Name	Part Number	Price
1	Dome	108-6921000-30	**$578.11**
2	Bolt	U17662	**$34.87**
3	Washer	NAS1149F0663P	**$0.11**
4	Rear Plate	108-6921000-22	**$166.12**
5	Bushing	108-6922006-8	**$14.79**
6	Front Plate	108-6921000-20	**$241.45**
7	Spacer Plate	108-6922006-10	**$90.44**

Frame

Description	Part #	Price
Frame Match Rib Assembly, Left, 1946-48	108-3001201-0	**$530.40**
Right	108-3001201-1	**$530.40**
Former and Rib Assembly, Left, 1946-48	108-3001201-400	**$184.94**
Right	108-3001201-401	**$184.94**
Frame Shroud Panel, 1946-48	108-3001302	**$286.66**
Frame Tunnel Cover Assembly, 1946-48	108-3001304	**$214.13**
Cooling Tunnel Side Support, Left, 1946-48	108-3001306-0	**$107.35**
Right	108-3001306-1	**$107.35**
Firewall Panel, Stations 18.75 to 31.75, 1946-48	108-3001310-2	**$210.05**
Landing Gear Opening Retainer, Left, 1946-48	108-3001434-6	**$87.70**
Right	108-3001434-7	**$87.70**
Frame Lower Longeron Retainer, Left, 1946-48	108-3001435-6	**$122.83**
Right	108-3001435-7	**$122.83**
Fuselage Former, Station 30.50 Fairing, 1946	108-3001437-0	**$121.81**
Fuselage Former, Station 30.50 Fairing, 1947	108-3001437-1	**$109.26**
Horizontal Stabilizer Fairing Plate, Left, 1946-47	108-3001445-0	**$52.30**
Right	108-3001445-1	**$52.30**
Fuselage Firewall, 1947	108-3002002-6	**$925.53**
Fuselage Former, Station 30.50 Fairing, 1948	108-3002446-6	**$47.07**
Frame Rear Compression Tube, 1946-47	108-3311003	**$109.77**
Landing Gear Front Fitting, Left, 1946-48	108-3311007-0	**$485.15**
Right	108-3311007-1	**$485.15**
Landing Gear Rear Fitting, Left, 1946-48	108-3311016-0	**$539.35**
Right	108-3311016-1	**$539.35**
Fuselage Rear Compression Tube,1948	108-3312003	**$213.57**
Fuselage Assembly, 1946-47	108-3411000-3	**$26,473.52**
Trim Control Tube, 1946-47	108-3411000-74	**$30.49**
Cabin Step, Left, 1946-48	108-3411047-0	**$329.58**
Right	108-3411047-1	**$329.58**
Trim Control Bracket, 1946-47	108-3411060	**$40.34**
Cabin Floor Support, 1946-48	108-8191000	**$45.64**

Cabin Doors and Windows

Door Latch Strike Plate, 1946-48	108-3001204-14	**$18.27**
Upper Cabin Door Hinge, 1946-48	108-3001210	**$134.13**
Front Window Strip, Left, 1946	108-3001211-114	**$75.07**
Right	108-3001211-115	**$76.94**
Aft Window Strip, Left, 1946	108-3001211-116	**$76.94**
Right	108-3001211-117	**$99.78**
Cabin Door Assembly, Left, 1946	108-3001211-2	**$1,288.19**
Right	108-3001211-3	**$1,288.19**
Cabin Door Assembly, Left, 1947	108-3001211-4	**$1,288.19**
Right	108-3001211-5	**$1,288.19**
Cabin Door Window Channel, 1946-47	108-3001211-60	**$35.17**
Windshield Top Wood Strip, 1946-48	108-3001213	**$239.23**
Cabin Door Window Lock Knob, 1946-47	108-3001214	**$4.56**
Windshield Center Post, 1946-48	108-3001218	**$212.54**
Windshield Center Post Retainer, 1946-48	108-3001220	**$25.30**
Windshield Upper Retainer, 1946-48	108-3001221	**$25.30**
Windshield Side Retainer, Left, 1946-48	108-3001222-6	**$46.00**
Right	108-3001222-7	**$46.00**
Cabin Window Retainer, Left, 1946-47	108-3001223-6	**$53.45**
Right	108-3001223-7	**$67.46**
Cabin Window Vertical Retainer, Left, 1946-47	108-3001224-6	**$11.49**
Right	108-3001224-7	**$11.49**
Cabin Door, Left, 1947	108-3002211-0	**$1,288.17**
Right	108-3002211-1	**$1,288.17**
Cabin Door, Left, 1948	108-3002211-2	**$1,288.17**
Right	108-3002211-3	**$1,288.17**
Station Wagon Cabin Door, Left, 1948	108-3002211-4	**$712.34**
Right	108-3002211-5	**$712.34**
Front Window Strip, 1946-48	108-3002211-18	**$145.49**
Aft Window Strip, 1946-48	108-3002211-20	**$51.75**
Cabin Door Window Striker, 1947	108-3002257	**$8.58**
Cabin Door Window Striker Plate, 1948	108-3002277-6	**$15.08**
Cabin Window Latch Spring, 1948	108-3002278-6	**$13.28**
Cabin Door Window Lock Knob, 1948	108-3002279-6	**$44.46**
Cabin Door Window Lock Knob, 1948	108-3002279-8	**$44.46**
Cabin Door Window Trim Plate, 1948	108-3002280-6	**$8.76**
Cabin Door Window Channels		
24.25", 1946-47	108-9000000-6	**$52.39**
14.5", 1946-47	108-9000000-7	**$26.64**
21.75", 1947-48	108-9000000-8	**$34.03**
11.5", 1947-48	108-9000000-9	**$34.25**

Stinson Rear "D" Window Frame

- Applicability: Stinson 108-3

Left	108-3002240-2	**$674.87**
Right	108-3002240-3	**$674.87**

Fuselage Bows

Fuselage Bow, Station 202.10, 1946-48	108-3001422	**$62.36**
Fuselage Bow, Station 177.0, 1946-48	108-3001423	**$78.61**
Fuselage Bow, Station 155.00, 1946-48	108-3001424	**$196.87**
Fuselage Bow, Station 126.00, 1946-48	108-3001425	**$166.59**
Fuselage Bow, Station 100.00, 1946-48	108-3001426	**$189.79**
Fuselage Bow, Station 61.600, 1946-48	108-3001427	**$128.96**
Fuselage Bow, Station 164.00, 1946-48	108-3001428	**$98.90**
Fuselage Bow, Station 140.00, 1946-48	108-3001429-0	**$99.13**
Fuselage Bow, Station 140.00, 1948	108-3001429-2	**$101.60**
Fuselage Bow, Station 115.50, 1946-48	108-3001430	**$204.72**
Fuselage Bow, Station 90.50, 1946-48	108-3001431	**$197.14**
Fuselage Bow, Station 18.75, 1946-48	108-3001433	**$105.32**
Fuselage Bow, Station 74.25 Fairing, 1946-48	108-3001436	**$140.75**
Fuselage Bow, Station 40.50 Fairing, 1946-48	108-3001438	**$68.56**
Fuselage Bow, Station 31.75 Fairing, 1946-48	108-3001442	**$166.49**

Frame to Landing Gear Fillets

Left	108-3001003-12	**$598.05**
Right	108-3001003-13	**$598.05**

Shop Online: www.univair.com

Round Inspection Plates

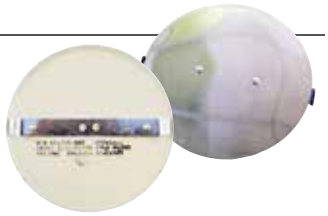

- Material: Aluminum
- Outside diameter: 4.75 inches
- Domed plate
- U12761-002 has additional rivets on the strap to help hold it in place

Original Piper Style Plate, With Additional Rivets ..... U12761-002 ..... **$46.86**
Generic Version .....483-10 ..... **$2.25**

Stringer Blank

- Sold in 8 foot lengths only
- Oversize fee applies when shipping this item

8 Foot Blank..... 108-3001432....**$53.61**

Fuel System Selector Valves

- Replaces original style valves
- Applications: left, right (not both), or off
- Not approved for higher horsepower engines
- See our website for complete list of all parts included in each kit

For 150hp aircraft with ⅜" fuel lines (44725)..... 108-9010076-38 ..... **$551.73**
For 165hp aircraft with ½" fuel lines (44745) ..... 108-9010076-12 ..... **$551.73**

Fuel Gauge and Sender

- Direct replacements for original gauge and sender

Gauge .....3090-033 ....**$237.42**
Sender .....7740-313 ....**$402.49**

Fuel System

Description	Part #	Price
Fuel Strainer Gasket, 1946-48	2212A	**$4.62**
Fuel Tank Cap, 1946-47	108-1121111	**$188.37**
Fuel Cap Gasket, 1946-48	108-1121112	**$2.32**
Fuel Tank Outlet Strainer, 1946-48	108-1121118	**$50.37**
Fuel Tank Strap Head, 1946-48	108-1121120	**$53.04**
Fuel Sender Gasket, 1946-48	108-1121126	**$3.61**
Fuel Tank Outlet Strainer, 1947-48	108-1122118	**$197.60**
Fuel Tank Cap, 1948	108-1122131	**$115.29**
Fuel Tank, Right, 1948	108-1122132-1	**$1,938.04**
Fuel Tank Vent Gasket, 1948	108-1122134	**$10.26**
Fuel Valve Shaft, 1946	108-3021103-0	**$40.76**
Fuel Valve Shaft, 1947	108-3021103-1	**$42.76**
Gas Line Trim Cover, 1947-48	108-3092111	**$168.41**
Tank to Valve Tube, ⅜ Inch, Left, 1946-47	108-6221100-8	**$101.60**
Right	108-6221100-10	**$101.60**
Primer to Tee Line, 1946	108-6221100-14	**$64.29**
Tee to Spray Tube, 1946-47	108-6221100-16	**$79.05**
Strainer to Primer Tube, 1946	108-6221100-44	**$79.56**
Valve to Strainer Tube, 1946-47	108-6221100-52	**$83.70**
Fuel System Hose, 1946-47	108-6221101	**$265.99**
Fuel Valve Shaft, 1947	108-6221106	**$152.85**
Tee to Spray Tube, 1947-48	108-6222100-28	**$36.03**
Primer Tube, 1947-48	108-6222100-32	**$69.75**
Tank to Valve Tube, Left, 1947-48	108-6222100-8	**$402.43**
Fuel Valve Shaft, 1947-48	108-6222106	**$210.64**
Fuel Tank Strap Bolt, 1946-48	108-8311000	**$28.31**
Strainer to Carburetor Hose, 1947-48	U-108-6222101-1A	**$278.62**

Toll Free Sales: 1-888-433-5433

We Accept: VISA MasterCard DISCOVER PayPal

Landing Gear • Chassis

Description	Part #	Price
Landing Gear Fillet Assembly, Left, 1946-48	108-3001003-12	**$598.05**
Right	108-3001003-13	**$598.05**
Oleo Housing Cap, 1946-48	108-3091005	**$35.63**
Landing Gear Brake Shield, 1946	108-5101007	**$9.45**
Landing Gear Brake Shield, 1946-48	108-5101008	**$15.04**
Shock Strut Spring, 1946-48	108-5181001	**$174.17**
Shock Strut Packing Retainer, 1946-48	108-5181007	**$220.03**
Shock Strut Pin, 1946-48	108-5181008	**$17.80**
Shock Strut Plunger, 1947-48	108-5182006	**$984.72**
Piston Ring Set, 1947-48	108-5182006-12-3	**$239.14**

Parking Brake Valve Assembly

FAA-PMA APPROVED

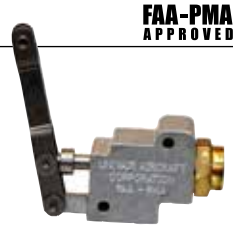

- Applicability: Stinson 108 Series
- Also for Piper PA-18 through PA-22

Parking Brake Valve Assemblies
U4500A-1 .....**$451.41**
U4500A-2 .....**$451.41**

Aircraft Ski Springs

STC APPROVED

- Atlee Dodge parts
- Applicability: Aeronca, Champion, Luscombe, Maule, Piper J-3 thru PA-22, Stinson, Taylorcraft
- Improves ski rigging tension in cold weather
- Use with tubular landing gear
- STC SA4624NM

Gold Color .....2127 ..... **$230.00**
Silver Color.....2097 ..... **$230.00**

Tailwheel and Spring Assembly

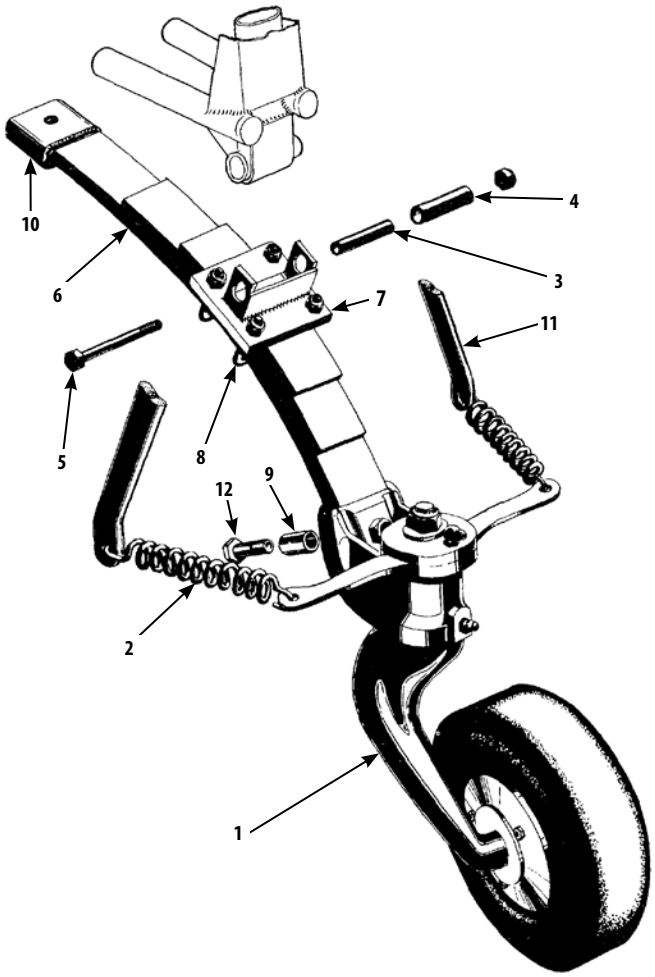

Figure/Description	Part #	Price
1) Wheel Assembly, Tail, 1946-48	45-2000	**N/A**
Bolt, 1946-48	AN8-14A	**N/A**
Washer (AN960-816), 1946-48	NAS1149F0863P	**$0.10**
Nut (AN365-820), 1946-48	MS21044N8	**$0.88**
2) Spring, Tailwheel Steering, 1946-48	U2134A-000	**$17.34**
3) Bushing, 1946-48	108-5311000-10	**$49.39**
4) Bushing, 1946-48	108-5311000-12	**$44.31**
6) Tailwheel Spring Assembly, 1946-48	108-5311002-2	**$335.96**
5) Bolt, 1946-48	AN5-25	**$1.22**
Nut, 1946-48	AN310-5	**$2.00**
Cotter Pin, 1946-48	AN380-2-2	**$0.04**
Screw, 1946-48	MS35207-267	**$0.18**
Washer, 1946-48	NAS1149F0363P	**$0.04**
Nut, 1946-48	MS21083N3	**$0.22**
Nut, 1946-48	MS21044N4	**$0.30**
7) Tailwheel Spring Fitting, 1946-48	108-5311003-2	**$331.22**
8) 'U' Bolt, 1946-48	108-5311005	**$55.36**
9) Bushing, 1946-48	108-5311004	**$20.34**
10) Tailwheel Spring Cushion, 1946-48	108-5311000-6	**$17.60**
11) Steering Fork	108-2583	**$164.65**
12) Bolt	AN8-14	**$6.30**

Order online at www.univair.com

Landing Gear Assembly

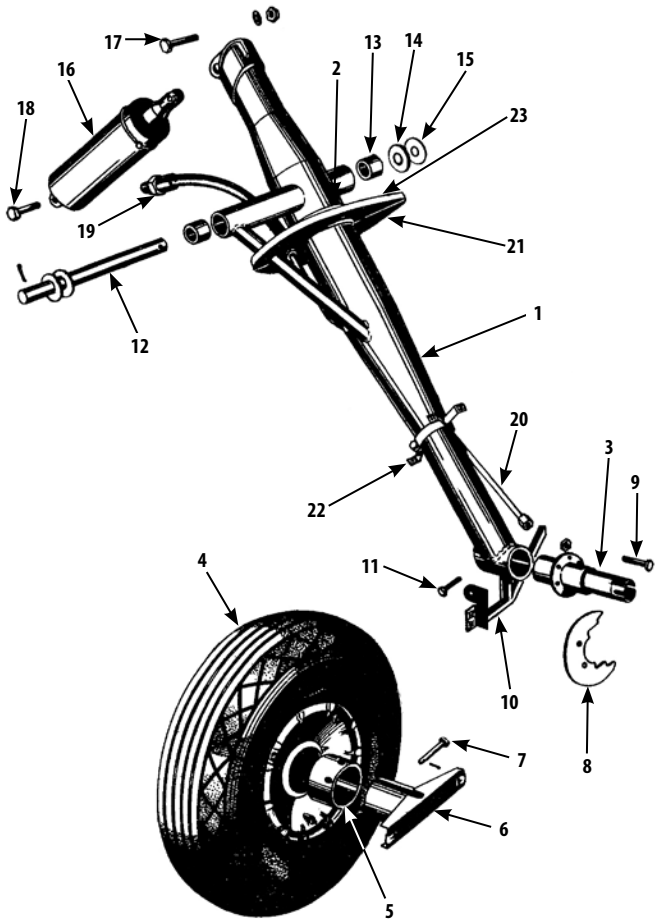

Figure/Description	Part #	Price
1) Landing Gear Beam (Includes Axle, Item 3), S/N 1 to 4124		
Left	108-5111000-0	**$2,811.51**
Right	108-5111000-1	**$2,811.51**
2) Upper Landing Gear Strut Clamp, 1946-48	108-5101103	**$58.27**
3) Landing Gear Axle, S/N 1 to 4124	108-5611001	**$922.11**
4) Tire, 7.00-6, 4-ply Heavy-Duty, 1946-48	108-5101000-14	**N/A**
Tube, 7.00-6, 1946-48	108-5101000-16	**N/A**
5) Goodyear Axle Nut, 1946-48	108-5111006	**$80.22**
Cleveland Axle Nut, S/N 4435 to 447648	108-5112006-6	**$51.90**
6) Wheel Pant Outer Bracket, 1946-48	108-5101104	**$170.40**
7) Clevis Pin (AN394-57), 1946-48	MS20392-3C57	**$3.16**
Cotter Pin, 1946-48	AN380-2-2	**$0.04**
8) Shield, Landing Gear Wheel Brake,		
1946, S/N 1 to 81, 83 to 111	108-5101007	**$9.45**
1946-48, S/N 82, 112 and up	108-5101008	**$15.04**
9) Bolt, 1946-48	AN4-10A	**$0.26**
10) Wheel Pant Inner Bracket, 1946-48		
Left	108-5101105-0	**$199.92**
Right	108-5101105-1	**$211.42**
11) Bolt, 1946-47	AN6-24A	**$1.20**
Washer, 1946-47	NAS1149F0632P	**$0.06**
Nut, 1946-47	MS21044N6	**$0.58**
12) Pin, Landing Gear Hinge, 1946-48	108-5111005	**$265.60**
13) Bushing, Landing Gear Hinge Pin, 1946-48	108-5111003	**$57.89**
14) Washer (AN960-1216), 1946-48	NAS1149F1290P	**$0.38**

15) Washer (AN960-1216L), 1946-48 ..... NAS1149F1232P **$0.18**
16) Landing Gear Shock Strut, 1946-48 ..... 108-5181000 ..... **$1,862.35**
17) Bolt, 1946-48 ..... AN6-14 ..... **$1.44**
Washer, 1946-48 ..... NAS1149F0663P **$0.11**
Nut, 1946-48 ..... AN310-6 ..... **$1.80**
Cotter Pin (AN380-3-4), 1946-48 ..... MS24665-285 ..... **$0.04**
18) Bolt, 1946-48 ..... AN6-21 ..... **$1.85**
19) Flexible Brake Hose, 1946-48
(N/A on S/N 4435 to 4476) ..... 108-5101304-1 ..... **$289.38**
20) Cleveland Brake Line, 1948 ..... 108-5102017 ..... **$84.74**
Goodyear Brake Line, 1946-48 ..... 108-5101000-18 ..... **$133.21**
21) Landing Strut Fairing Bulkhead, 1946-48
Left ..... 108-5101102-8 ..... **$51.67**
Right ..... 108-5101102-9 ..... **$51.67**
22) Lower Landing Gear Fairing Clamp, 1946-48 ..... 108-5101107 ..... **$119.48**
23) Landing Strut Fairing Bulkhead, 1946-48
Left ..... 108-5101102-6 ..... **$81.78**
Right ..... 108-5101102-7 ..... **$81.78**

Cleveland Conversion Kit

Replace your original Goodyear wheels and brakes. This kit is approved by Type Certificate and is easy to install, requiring no modification to existing beam and axle assembly.

- Tire size: 7.00-6
- Will fit late model 108-3 with early axle nut and different plumbing

Cleveland Wheels & Brakes Kit ..... 199-08700 ..... **$4,648.34**

Landing Gear Fairing

Left Fairing
108-5101100-10 ..... **$391.87**

Right Fairing
108-5101100-15 ..... **$380.64**

Bushwheel 3200 Tailwheel

The 3200 series is a lightweight 8 inch tailwheel assembly designed to provide positive steering control far beyond rudder travel, and to release easily and automatically to full swivel when aircraft is turned around. The swivel mechanism is sealed to keep out water, sand and mud. Grease fittings are provided for lubrication. Precision components provide years of trouble-free service under severe operating conditions. Pneumatic assembly.

Pneumatic Assembly 3200 Tailwheel ..... ABI-3200 ..... **$1,862.00**

For Specialty Tires, see the
Tires • Wheels • Brakes
section beginning on page 271

Stinson's Golden Age, Volumes 1 and 2

Two volumes about the history of the Stinson 108 series airplane (the Voyager), although the Stinson 105, Stinson 10 and 10A, as well as the Stinson L-5, are also covered in great detail. It begins in **Stinson's Golden Age, Volume 1**, with the three-place 105 in 1938 and concludes in **Stinson's Golden Age, Volume 2**, with the sale of the last Stinson 108-3 from Willow Run in 1950. The books include production figures, the disposal of surplus military aircraft, the all-Piper Apache and the chronicle of two Stinson dealers, all included to give the reader a better sense of the Golden Age of Aviation.

Stinson's Golden Age, Volume 1 ..... SGA-1 ..... **$27.25**
Stinson's Golden Age, Volume 2 ..... SGA-2 ..... **$26.95**

Modification Kits

Rudder Pulley Modification Kit

- Complies with SB 266 (Piper Bulletin 114)

Modification Kit ..... 750-189 ..... **$447.50**

Float Fitting Kit

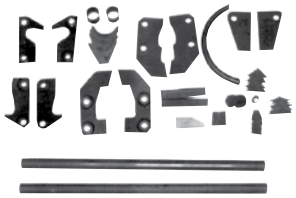

- Complete with blueprint installation instructions
- Welding is required

108-3901001 ..... **$1,368.96**

Stinson Jettison Door Kit

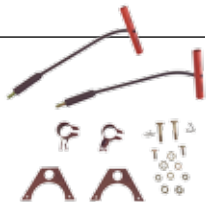

- Required for aircraft certified in the utility category
- Includes all parts and installation instructions

For S/N 1 to 3929 ..... 108-3992046 ..... **$1,009.77**
For S/N 3930 and up ..... 108-3992046-1 ..... **$820.49**

Rudder Bungee Kit

Kit is required when 165hp or larger engine is installed in 108 or 108-1 Stinson. Some welding is required.

108-3042450 ..... **$2,905.56**

Buy Stinson parts on www.univair.com

We Accept: VISA MasterCard DISCOVER PayPal

Propellers

Univair furnishes a bolt kit with each propeller purchase. Bolt kits can also be purchased separately from our website.

Propeller descriptions below show basic aircraft/engine model applicability. Check manufacturer's websites for exact applicability before purchasing, or contact our sales staff at 1-888-433-5433 and we can research it for you.

Please note that we do not stock all of the propellers listed. Non-stocked items may have up to a 6 week lead time.

McCauley Aluminum Fixed Pitch Propellers

Stinson 10, HW-75, Continental C-85 ..... CM7144 ..... **$5,679.19**
Stinson 10, HW-75, Continental C-85 ..... CM7146 ..... **$5,679.19**
Stinson 108 Series, Franklin 6A4 ..... DM7654 ..... **$5,726.21**
Stinson 108 Series, Franklin 6A4 ..... SFC7654 ..... **$5,345.60**
Stinson 108 Series, Franklin 6A4 ..... DM7649 ..... **$5,345.60**
Stinson 108 Series, Franklin 6A4 ..... SFC7652 ..... **$5,726.21**

Sensenich Aluminum Propellers

Stinson 108 Series, Franklin 6A4 ..... 74DR-0-56 ..... **$5,632.50**

Sensenich Wood Propellers

Stinson 10, 105, HW-75, Continental A-75, A-80 ..... W70DK-40 ..... **$3,550.00**
Stinson 10, 105, HW-75, Continental A-75, A-80 ..... W70DK-42 ..... **$3,550.00**
Stinson 108 Series, Franklin 6A4 ..... W76JR-53 ..... **$5,195.00**

Tail Section

Description	Part #	Price
Inboard Horizontal Stabilizer Rib, Left	108-2111001-6	**$133.38**
Right	108-2111001-7	**$133.38**
Inboard Stabilizer Half Rib, 1946-47	108-2111005-6	**$11.05**
Outboard Stabilizer Half Rib, 1946-47	108-2111005-8	**$11.05**
Inboard Horizontal Stabilizer Half Rib, 1946-47	108-2111006-6	**$25.45**
Outboard Horizontal Stabilizer Half Rib, 1946-47	108-2111006-8	**$25.45**
Inboard Horizontal Stabilizer Half Rib, 1946-47	108-2111007-6	**$15.73**
Outboard Horizontal Stabilizer Half Rib, 1946-47	108-2111007-8	**$15.73**
Horizontal Stabilizer Rib, Station 52.69, 1946-48	108-2111008	**$73.88**
Horizontal Stabilizer Outboard Fitting, 1946-48	108-2111011	**$182.66**
Outboard Stabilizer Skin, Right, 1948	108-2111020-12	**$244.79**
Inboard Stabilizer Skin, Left, 1948	108-2111020-8	**$244.79**
Stabilizer Rib, Station 28.00, 1948	108-2111025	**$84.24**
Stabilizer Rib, Station, Station 35.00, 1948	108-2111026	**$95.20**
Stabilizer Rib, Station 42.50, 1948	108-2111027	**$87.39**
Elevator Tab Stud, 1946-48	108-2201005	**$56.23**
Elevator Outboard Rib, 1946-48, Left	108-2201007-22	**$109.48**
Right	108-2201007-23	**$124.77**
Elevator Tip Rib, 1946-48	108-2201007-24	**$135.25**
Vertical Stabilizer Spar, 1946-47	108-2311000-10	**$97.02**
Vertical Stabilizer Tip Assembly, 1946-47	108-2311000-407	**$61.84**
Vertical Stabilizer Rib, Station 63.35, 1946-47	108-2311001	**$17.87**
Vertical Stabilizer Half Rib, Station 55.35, 1946-47		
Left	108-2311002-6	**$27.34**
Right	108-2311002-8	**$27.34**
Vertical Stabilizer Half Rib, Station 47.35, 1946-47		
Left	108-2311003-6	**$27.34**
Right	108-2311003-8	**$27.34**
Vertical Stabilizer Spar, 1946-47	108-2311008	**$10.59**
Vertical Stabilizer Upper Hinge Bracket, 1946-47	108-2311011	**$12.26**
Vertical Stabilizer Fairlead, 1948	108-2311015	**$15.53**
Fabric Side Strip, 1948	108-2312020-8	**$13.47**
Vertical Stabilizer Rib, 1948	108-2312050-12	**$133.90**
Vertical Stabilizer Rib, 1948	108-2312050-14	**$79.92**
Vertical Stabilizer Fairing, 1948	108-2312050-18	**$86.25**
Vertical Stabilizer Angle, 1948, Left	108-2312050-22	**$34.70**
Right	108-2312050-23	**$34.70**
Fin Fairing Seal, 1948	108-2312050-32	**$67.37**
Vertical Stabilizer Skin, 1948, Left	108-2312050-34	**$715.53**
Right	108-2312050-35	**$715.53**
Vertical Stabilizer Stiffener, 1948, Left	108-2312050-42	**$83.77**
Right	108-2312050-43	**$83.77**
Vertical Stabilizer Angle, 1948	108-2312050-56	**$22.97**
Vertical Stabilizer Gusset, 1948	108-2312050-58	**$33.60**
Vertical Stabilizer Rib, 1948	108-2312050-6	**$99.73**
Vertical Stabilizer Rib, 1948	108-2312050-8	**$49.72**
Bracket Assembly, 1948	108-2312051	**$115.88**
Fairing Angle, 1948	108-2602100-5	**$21.71**
Fairing Angle, 1948	108-2602100-6	**$28.64**
Fairing Angle, 1948, Left	108-2602100-81	**$15.44**
Right	108-2602100-91	**$20.04**
Rudder Spar, 1946-47	108-2611000-10	**$155.76**
Rudder Skin, 1946-47, Left	108-2611000-6U	**$295.33**
Right	108-2611000-7U	**$295.33**
Upper Fairing Angle, 1946-47, Left	108-2611000-AL	**$16.19**
Right	108-2611000-AR	**$16.19**
Middle Fairing Angle, Left or Right, 1946-47	108-2611000-B	**$16.19**
Lower Fairing Angle, Left or Right, 1946-47	108-2611000-C	**$17.19**
Upper Rudder Fitting Assembly, 1946-48	108-2611002	**$74.42**
Lower Rudder Fitting Assembly, 1946-48	108-2611003	**$173.37**
Auxiliary Rudder Spar, 1946-47	108-2611005	**$18.41**
Rudder Tip Rib, 1946-47	108-2611006	**$35.78**
Lower Rudder Rib, 1946-47	108-2611007	**$17.33**
Rudder Horn Assembly, 1946-47	108-2611008-0	**$205.35**

Horizontal Stabilizer

Horizontal Stabilizer Assembly, 1946-1948 ..... 108-2111020 ..... **$8,624.71**
Center Hinge Fitting, 1946-1947 ..... 108-2111012 ..... **$182.66**
Outboard Left Skin,1948 ..... 108-2111020-6 ..... **$244.79**
Inboard Right Skin,1948 ..... 108-2111020-14 ..... **$244.79**
Fairing Plate Assembly, Left, 1946-1947 ..... 108-3001445-0 ..... **$52.30**
Right ..... 108-3001445-1 ..... **$52.30**

Rudders

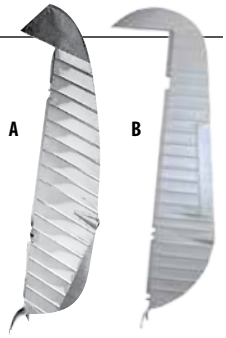

These rudders and skin kits DO NOT have the original Stinson dimple corrugation; they use the Piper-Stinson designed "V" type corrugation.

Rudders
- A) For 108, 108-1, 108-2
  108-2611000 ..... **$3,535.52**
- B) For 108-3 (Includes Tab)
  108-2602100 ..... **$4,285.87**

Rudder Skin Kit
- For 108, 108-1, 108-2 ..... 108-2611000-500 ..... **$867.16**
- For 108-3 ..... 108-2602100-500 ..... **$1,433.76**

Rudder Bungee Kit

Bungee Kit is required when 165hp engine or larger engine is installed in 108 or 108-1 Stinson. Some welding required.

Complete Bungee Kit ..... 108-3042450 ..... **$2,905.56**

Additional Rudder Parts

Steering Arm, 1946-48 ..... 108-2583 ..... **$164.65**
Top Skin, 1948, Left ..... 108-2602100-8 ..... **$242.39**
Right ..... 108-2602100-9 ..... **$242.39**
Spar, 1948 (2602100-18) ..... 108-12905-4 ..... **$152.22**
Trim Tab, 1948 (2602100-64) ..... 108-12905-12 ..... **$354.21**
Light Housing, 1948, Left (2602100-68) ..... 108-12905-11 ..... **$89.87**
Right (2602100-69) ..... 108-12905-11 ..... **$89.87**
Trim Tab Spring, 1948 ..... 108-2602101-6 ..... **$16.55**
Top Skin, 1946-1947, Left ..... 108-2611000-8 ..... **$39.01**
Right ..... 108-2611000-9 ..... **$39.01**
Horn, with Bearing, 1948 ..... 108-2611008-2 ..... **$213.24**

Elevators

These elevators DO NOT have the original Stinson dimple corrugation; they use the Piper-Stinson designed "V" type corrugation.

Left (with Trim Tab), 1946-48 ..... 108-2201007-0 ..... **$5,440.59**
Right, 1946-48 ..... 108-2201007-1 ..... **$5,440.59**

Additional Elevator Parts

Trim Tab Assembly, 1946-47 ..... 108-2201001-0 ..... **$360.80**
Elevator Horn, 1946-48 ..... 108-2201006 ..... **$115.07**
Tab Mechanism Cover Assembly, 1946-48 ..... 108-2201012 ..... **$24.89**
Rudder Trim Casing Assembly, 1946-48 ..... 108-2241602 ..... **$183.78**
Rudder Tab Mechanism Housing, 1946-48 ..... 108-2241603 ..... **$114.37**
Tab Control Shaft Assembly, 1946-48 ..... 108-2241606 ..... **$121.90**
Trim Tab Control Shaft, 1946-48 ..... 108-2241608 ..... **$490.17**
Trim Tab Mechanism Rod, 1946-48 ..... 108-2241610 ..... **$215.82**

Visit our website to browse our full line of Stinson parts and supplies. www.univair.com

Vertical Stabilizer

Vertical Stabilizer Assembly, 1946-47 ..... 108-2311000 ..... **$4,220.95**
Lower Hinge Bracket, 1946-48 ..... 108-2311013 ..... **$11.83**
Fabric Strip, 1946-48 ..... 108-2311016 ..... **$23.80**
Fabric Trim Strip, S/N 2125 to 3500 ..... 108-2311017 ..... **$26.56**
Leading Edge Fabric Band, 1948 ..... 108-2312018-6 ..... **$17.62**
Side Trim Band, Left, 1948 (108-2312019-7) ..... 108-2312019-6 ..... **$68.60**
Outboard Fabric Side Strip, Left, 1948 ..... 108-2312020-6 ..... **$13.76**
Inboard Fabric Side Strip, Left, 1948 (2312020-8) .... 108-2312020-6 ..... **$13.76**
Rear Spar, 1948 ..... 108-2312050-16 ..... **$219.74**
Front Spar, 1948 ..... 108-2312050-40 ..... **$370.26**
Dorsal Skin, 1948, Left ..... 108-2312050-52 ..... **$203.78**
Right ..... 108-2312050-53 ..... **$122.18**
Center Hinge Fitting, 1946-47 ..... 108-2611012 ..... **$181.07**

Vertical Stabilizer Skin

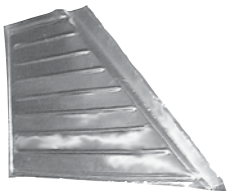

- Upper vertical stabilizer skin stamping for 108-3 (original style)

Left ..... 108-2312050-20 ..... **$845.36**
Right ..... 108-2312050-21 ..... **$845.36**

Windows • Windshields

Prices below are for clear windows and windshields only. See our website for prices and availability of Solar Gray and Green tinted versions. Delivery time is 4 weeks from date of order.

Stinson L-5

Windshield Half, Left ..... 76-31073-0 ..... **$201.96**
Right ..... 76-31073-1 ..... **$201.96**
Windshield, 1-piece ..... 76-31073-2 ..... **$353.43**
Rear Window, Left ..... 76-31126-0 ..... **$164.09**
Rear Window, Right ..... 76-31126-1 ..... **$192.31**

Stinson 108, 108-1, 108-2 and 108-3

Windshield Half, Left ..... 108-3002208-6 ..... **$260.62**
Windshield Half, Right ..... 108-3002208-7 ..... **$260.62**
Rear Window, Left or Right
- (S/N 1 to 3499) ..... 108-3001212 ..... **$51.23**
- (S/N 3500 and up) ..... 108-3002212 ..... **$51.23**

Forward Window Assembly, Left Door
- (S/N 1 to 1989) ..... 108-3001211-54 ..... **$221.51**
- (S/N 1990 to 3499) ..... 108-3002211-26 ..... **$213.12**
- (S/N 3500 and up) ..... 108-3002211-90 ..... **$371.24**

Forward Window Assembly, Right Door
- (S/N 1 to 1989) ..... 108-3001211-55 ..... **$220.82**
- (S/N 1990 to 3499) ..... 108-3002211-27 ..... **$237.69**
- (S/N 3500 and up) ..... 108-3002211-91 ..... **$381.46**

Rear Window Assembly, Left Door
- (S/N 1 to 1989) ..... 108-3001211-56 ..... **$235.21**
- (S/N 1990 and up) ..... 108-3002211-28 ..... **$185.34**

Rear Window Assembly, Right Door
(S/N 1 to 1989) ... 108-3001211-57 ... **$152.11**
(S/N 1990 and up) ... 108-3002211-29 ... **$226.24**

Wings

Description	Part #	Price
Tie Down Eye Bolt, 1948	#59	**$11.60**
Aileron Spacer, 1946-47	108-1001000-8	**$39.42**
Lift Strut Lower Fillet Rib, 1946-48	108-1001004	**$46.51**
Flap Hinge Fairing, Left, 1946	108-1002006-16	**$141.49**
Right, 1946	108-1002006-17	**$141.49**
Upper Wing Gap Band, Left, 1946-48	108-1101002-6	**$60.25**
Right	108-1101002-7	**$60.25**
Lower Wing Gap Band, Left, 1946-48	108-1101003-6	**$82.20**
Right	108-1101003-7	**$82.20**
Fuel Tank Strap Reinforcement, 1946-48	108-1101013	**$13.52**
Fuel Tank Strap Cover, 1946-48	108-1101014	**$38.72**
Front Spar Tip, 1946-48, Left	108-1111006-6	**$105.23**
Right	108-1111006-7	**$105.23**
Spar Drag Wire Block, 1946-48, Left	108-1111051-6	**$52.08**
Right	108-1111051-7	**$52.08**
Aft Front Spar Bracket, 1946-48, Left		
S/N 1 to 742	108-1111056-0A	**$202.71**
S/N 743 to 3500	108-1111056-0B	**$194.20**
Aft Front Spar Bracket, 1946-48, Left		
S/N 1 to 742	108-1111056-1A	**$214.13**
S/N 743 to 3500	108-1111056-1B	**$214.13**
Forward Front Spar Bracket, 1946-47, Left		
S/N 1 to 742	108-1111057-0A	**$353.40**
S/N 743 to 3500	108-1111057-0B	**$353.40**
Forward Front Spar Bracket, 1946-47, Right		
S/N 1 to 742	108-1111057-1A	**$353.40**
S/N 743 to 3500	108-1111057-1B	**$353.40**
Rear Spar Tip, Right, 1946-47	108-1111061-7	**$59.20**
Rear Spar Tip, Left, 1946-48	108-1111061-8	**$83.21**
Rear Spar Tip, Right, 1948	108-1111061-9	**$108.72**
Spar Drag Wire Block, 1946-48, Left	108-1111063-6	**$67.46**
Right	108-1111063-7	**$40.63**
Aft Rear Spar Bracket, 1946-48, Left		
S/N 1 to 742	108-1111064-0A	**$353.40**
S/N 743 to 3500	108-1111064-0B	**$353.40**
Aft Rear Spar Bracket, 1946-48, Right		
S/N 1 to 742	108-1111064-1A	**$353.40**
S/N 743 to 3500	108-1111064-1B	**$353.40**
Forward Rear Spar Bracket, 1946-48, Left		
S/N 1 to 742	108-1111065-0A	**$353.40**
S/N 743 and up	108-1111065-0B	**$353.40**
Forward Rear Spar Bracket, Right, 1946-48		
S/N 1 to 742	108-1111065-1A	**$353.40**
S/N 743 and up	108-1111065-1B	**$353.40**
Aileron Bellcrank Bracket, 1946-48	108-1111069	**$29.03**
Spar Drag Wire Block, 1946-48, Left	108-1111074-8	**$45.01**
Right	108-1111074-9	**$45.01**
Forward Front Spar Fitting, 1946-48, Left	108-1111076-400	**$121.94**
Right	108-1111076-401	**$121.94**
Landing Light Retainer, Left, 1946-48	108-1111084-6	**$34.70**
Landing Light Lens Retainer, 1946-48	108-1111086	**$27.86**
Landing Light Lens Retainer, Left, 1946-48	108-1111087	**$23.53**
Landing Light Bracket, 1946-48	108-1111088	**$53.14**
Landing Light Bracket, 1946-48	108-1111089	**$53.14**
Cabin Ventilator Intake Grille, 1946-48	108-1111130	**$31.92**
Forward Rear Spar Fitting, Left or Right, 1948	108-1112078-1	**$169.40**
Forward Rear Spar Fitting, Left, 1946-47	108-1112078-400	**$81.76**
Right	108-1112078-401	**$81.76**
Aft Rear Spar Fitting, Left, 1946-47	108-1112079	**$51.22**
Right	108-1112079-1	**$67.46**
Aft Front Spar Fitting, 1948	108-1112150	**$168.47**
Aft Rear Spar Fitting, Left or Right, 1948	108-1112151-0	**$172.52**
Filler Neck Gasket, 1946-48	108-1121109	**$13.31**
Fuel Tank Strap, 1946-48	108-1121119	**$161.74**
Fuel Tank Strap Clip, 1946-48	108-1121121	**$15.11**
Fuel Tank Vent, 1948	108-1122133-2	**$136.35**
Aileron Bellcrank, S/N 1 to 3109, Left	108-1141204-0	**$359.44**
Right	108-1141204-1	**$359.44**
Aileron Push Pull Rod, S/N 1 to 3109	108-1141207-0	**$235.08**
Aileron Push Pull Rod, S/N 3110 and up	108-1141207-1	**$326.77**
Wing Flap Control Bellcrank, S/N 1 to 3109	108-1141500	**$274.16**
Wing Flap Bellcrank Support, S/N 1 to 3109		
Left	108-1141501-0	**$147.59**
Right	108-1141501-1	**$147.59**
Wing Flap Bellcrank Support, S/N 3110 and up		
Left	108-1141501-2	**$167.01**
Right	108-1141501-3	**$148.79**
Aileron Bellcrank, S/N 3110 and up, Left	108-1142204-0	**$257.48**
Right	108-1142204-1	**$257.48**
Wing Flap Control Bellcrank, S/N 3110 and up	108-1142500	**$308.19**
Landing Light Deflector, 1946-48	108-1161003	**$24.89**
Flap Assembly, 1946-48, Left	108-12906	**$3,691.65**
Right	108-12906-1	**$3,691.65**
Aileron Rib, 1946-47, Left	108-1711000-6	**$12.17**
Right	108-1711000-7	**$12.17**
Aileron Rib, 1946-47, Left	108-1711000-8	**$13.27**
Right	108-1711000-9	**$13.27**
Aileron Rib, 1946-47, Left	108-1711000-10	**$20.31**
Right	108-1711000-11	**$20.31**
Aileron Former, 1946-47, Left	108-1711000-14	**$48.24**
Right	108-1711000-15	**$48.24**
Aileron Former, 1946-47, Left	108-1711000-18	**$94.73**
Right	108-1711000-19	**$244.37**
Aileron Channel, 1946-47	108-1711000-26	**$6.76**
Aileron Bracket, 1946-47, Right	108-1711000-29	**$10.59**
Aileron Tip Trailing Edge Former, 1946-47	108-1711005	**$50.93**
Aileron Trailing Edge Former, 1946-47, Left	108-1711006-0	**$396.01**
Right	108-1711006-1	**$396.01**
Aileron Trim Tab, S/N 2250 to 3500	108-1711014	**$6.76**
Aileron Tip Brace Rib, 1946-47, Left	108-1711016	**$18.41**
Right	108-1711016-1	**$51.40**
Rear Lift Strut Yoke, 1946-48	108-1911013	**$104.32**
Door Friction Catch, 1948	108-3000250	**$8.35**
Wing Tip Antenna Bracket, 1948	108-3032526	**$10.84**
Fuel Tank Strap Bolt, 1946-48	108-8311000	**$28.31**

Ailerons

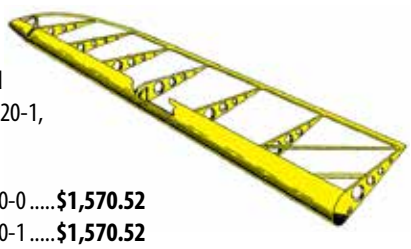

- Uncovered
- On 108-3 aircraft, these ailerons may be used instead of the 1712020-0 and 1712020-1, if used in pairs

Left ..... 108-1711000-0 .....**$1,570.52**
Right..... 108-1711000-1 .....**$1,570.52**

Rod End Bearings

This **threaded** rod end bearing is used on pushrod assemblies manufactured by Univair in 1981 and later.

- Applicability: Stinson flap and aileron pushrod rod end bearing
- Thread: ⅜-24
- Bore: 3⁄16 inch
- Type Shank: Male

Threaded Rod End Bearing, Male .....GMM-3M-680 ..... **$26.50**

This **unthreaded** rod end bearing is used on factory original and replacement parts manufactured prior to 1981.

Unthreaded Rod End Bearing.....REP3H5 ..... **$85.76**

Aileron Inspection Hole Frame and Cover

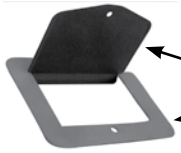

Aileron Inspection Hole
Cover .....108-1711012.....**$21.26**
Frame .....108-1711011.....**$10.82**

Strut Fillets

Upper Lift Strut Fillet
Front, Left..... 108-1001001-0 .....**$105.84**
Front, Right ..... 108-1001001-1 .....**$105.84**
Rear, Left ..... 108-1001002-0 .....**$102.75**
Rear, Right..... 108-1001002-1 .....**$102.75**
Lower Lift Strut Fillet
Left..... 108-1001003-0 .....**$227.58**
Right..... 108-1001003-1 .....**$227.58**

Leading Edge Slat

- Applicability: All 108 Stinsons

Leading Edge Slat .....108-1811300-2..... **$609.51**

Pitot Tube

108-1131002 .... **$333.67**

Lift Struts

- Lifts struts will be shipped via freight only

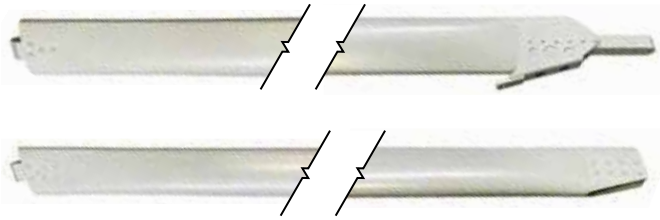

Front Strut.....108-1911000 .....**$1,916.66**
Rear Strut.....108-1911010 .....**$1,537.79**

NOTES

Wing Panel Assemblies, Uncovered

See Figure 1 on page 166

- Wing assemblies do not include flaps, ailerons, pitot tubes, fuel tanks or landing lights
- All products are priced and sold individually unless otherwise noted
- Wing assemblies are shipped via Freight only and will incur crate charges

Fig	Description	Part Number	Price
1946-47 Wing Assembly, Uncovered, Left		108-1111000-1	**$19,027.47**
1946-47 Wing Assembly, Uncovered, Right		108-1111001-1	**$19,027.47**
1948 Wing Assembly, Uncovered, Left		108-1111000-2	**$19,027.47**
1948 Wing Assembly, Uncovered, Right		108-1111001-2	**$19,027.47**
1)	Wing Root Rib Assembly, Left	108-1111038-0 [1]	**$531.18**
	Wing Root Rib Assembly, Right	108-1111038-1 [1]	**$463.46**
	Wing Root Rib Assembly, Left	108-1111038-2 [2]	**$352.81**
	Wing Root Rib Assembly, Right	108-1111038-3 [2]	**$910.61**
	Wing Root Rib Assembly, Left	108-1111038-4	**$376.27**
	Wing Root Rib Assembly, Right	108-1111038-5	**$376.27**
2)	Wing Rib, Stations 12.88 through 33.50	108-1111009 [5]	**$140.98**
3)	Wing Rib	108-1111010	**$129.61**
4)	Wing Rib, Station 170.19, Tip, Left	108-1111032-0	**$232.11**
	Right	108-1111032-1	**$206.92**
5)	Wing Tip Assembly, Left	108-1111050-0	**$1,810.51**
	Right	108-1111050-1	**$2,518.74**
6)	Trailing Edge, Stations 156.00 through 170.19		
	Left	108-1111047-0	**$150.67**
	Right	108-1111047-1	**$150.67**
7)	Outboard Trailing Edge, Left	108-1111046-0	**$502.44**
	Right	108-1111046-1	**$413.31**
8)	Inboard Trailing Edge, Left	108-1111045-0	**$413.30**
	Right	108-1111045-1	**$413.30**
	Left	108-1111045-2	**$413.30**
	Right	108-1111045-3	**$413.30**
9)	Leading Edge Skin, Root Rib to Station 104.31		
	Left	108-1111043-6	**$606.15**
	Left	108-1111043-10	**$430.50**
10)	Leading Edge Skin, Stations 104.31 through 143.81		
	Left	108-1111040-6	**$85.44**
	Right	108-1111040-7	**$99.20**
11)	Leading Edge Skin, Outboard, Left	108-1111041-10	**$450.81**
	Right	108-1111041-11	**$450.81**
12)	Trailing Edge Hanger, Stations 116.875 and 155.875		
	Left	108-1111021-0	**$321.43**
	Right	108-1111021-1	**$321.43**
13)	Wing Trailing Edge Former	108-1111013	**$35.78**
14)	Wing Rib, Station 94.00	108-1111123	**$105.32**
15)	Trailing Edge Former, Station 113.50	108-1111108	**$39.64**
16)	Trailing Edge Hanger, Station 77.875, Left	108-1111028	**$275.82**
	Right	108-1111028	**$275.82**
17)	Trailing Edge Former	108-1111008-6	**$37.60**
18)	Trailing Edge Hanger, Station 46.00, Left	108-1111011-400	**$217.41**
	Right	108-1111011-401	**$217.41**
	Left	108-1112149-1	**$383.57**
	Right	108-1112149-0	**$170.43**
19)	Former, Wing Trailing Edge, Station 33.50	108-1111107	**$32.28**
20)	Trailing Edge Former	108-1111029-6	**$35.78**
21)	Trailing Edge Hanger, Station 1.625, Left	108-1111012-0 [3]	**$217.41**
	Right	108-1111012-1	**$217.41**
	Left	108-1111012-2 [6]	**$217.41**
22)	Leading Edge Former, Stations 12.88 through 35.50 and 104.31	108-1111020-6	**$38.65**
23)	Leading Edge Former, Station 46.00	108-1111110	**$111.07**
24)	Leading Edge Former, Stations 43.875 through 94.00 and 143.81	108-1111016	**$73.20**
25)	Former Assembly, Wing Leading Edge	108-1111072	**$148.23**
26)	Leading Edge Former, Stations 104.31 through 130.56	108-1111017	**$66.89**
27)	Leading Edge Former	108-1111073	**$173.61**
28)	Leading Edge Former, Station 156.00	108-1111015	**$44.15**
29)	Front Spar Assembly, Left	108-1111002-2	**$1,524.57**
	Right	108-1111002-3	**$1,524.57**
	Left	108-1112146	**$2,790.88**
	Right	108-1112146-1	**$2,790.88**
30)	Rear Spar Assembly, Left	108-1111060-2 [4]	**$912.40**
	Left	108-1111060-4 [7]	**$912.40**
	Right	108-1111060-5 [7]	**$912.40**
	Left	108-1112147-0	**$2,691.21**
	Right	108-1112147-7	**$1,108.12**
31)	Wing Brace Tube	108-1111109-6	**$61.40**
	Wing Brace Tube	108-1111109-8	**$61.40**
32)	Wing Compression Tube Assembly	108-1111025-1	**$304.73**
	Wing Compression Tube Assembly	108-1111025-1	**$304.73**
33)	Drag Wire Spar Block, Station 87.188, Left	108-1111049-6	**$44.70**
	Right	108-1111049-7	**$44.70**
34)	Landing Light Support	108-1111083	**$25.75**
35)	Wing Brace, Stations 0.00 and 46.00 Rib	108-1111106	**$14.37**
36)	Flap and Aileron Hinge (includes item 38)	108-1111034	**$148.77**
37)	Drag Wire, 41.50" Long	108-1111054-6	**$41.73**
38)	Bearing	CS3906	**$38.74**
39)	Wing Rib, Station 155.875	108-1111124	**$116.30**
40)	Drag Wire, 51.00" Long	108-1111054-7	**$91.56**
41)	Cabin Ventilator Air Intake Bulkhead, Left	108-1111106	**$14.37**
	Right	108-1111107	**$32.28**
42)	Drag Wire, 41.50" Long	108-1111054-10	**$44.70**
43)	Spar Tip Rib	108-1111122	**$81.03**
44)	Inboard Leading Edge Skin, Left	108-1111041-8	**$524.81**
	Right	108-1111041-9	**$524.81**
45)	Felt Seal (2 required per hanger)	108-8001001	**$2.58**

[1] For airplanes serial 108-1 through 108-2572
[2] For airplanes serial 108-2573 through 108-3500
[3] For airplanes serial 108-1 through 108-2509
[4] For airplanes serial 108-1 through 108-3109
[5] Six each used per plane on serial 108-1 through 108-3500 and eight per plane on serial 108-3501 and up
[6] For airplanes serial 108-2510 and up
[7] For airplanes serial 108-3110 through 108-3500

Visit our website to browse our full line of Stinson parts and supplies.

Figure 1 • Wing Panel Assembly

Parts list begins on page 165.

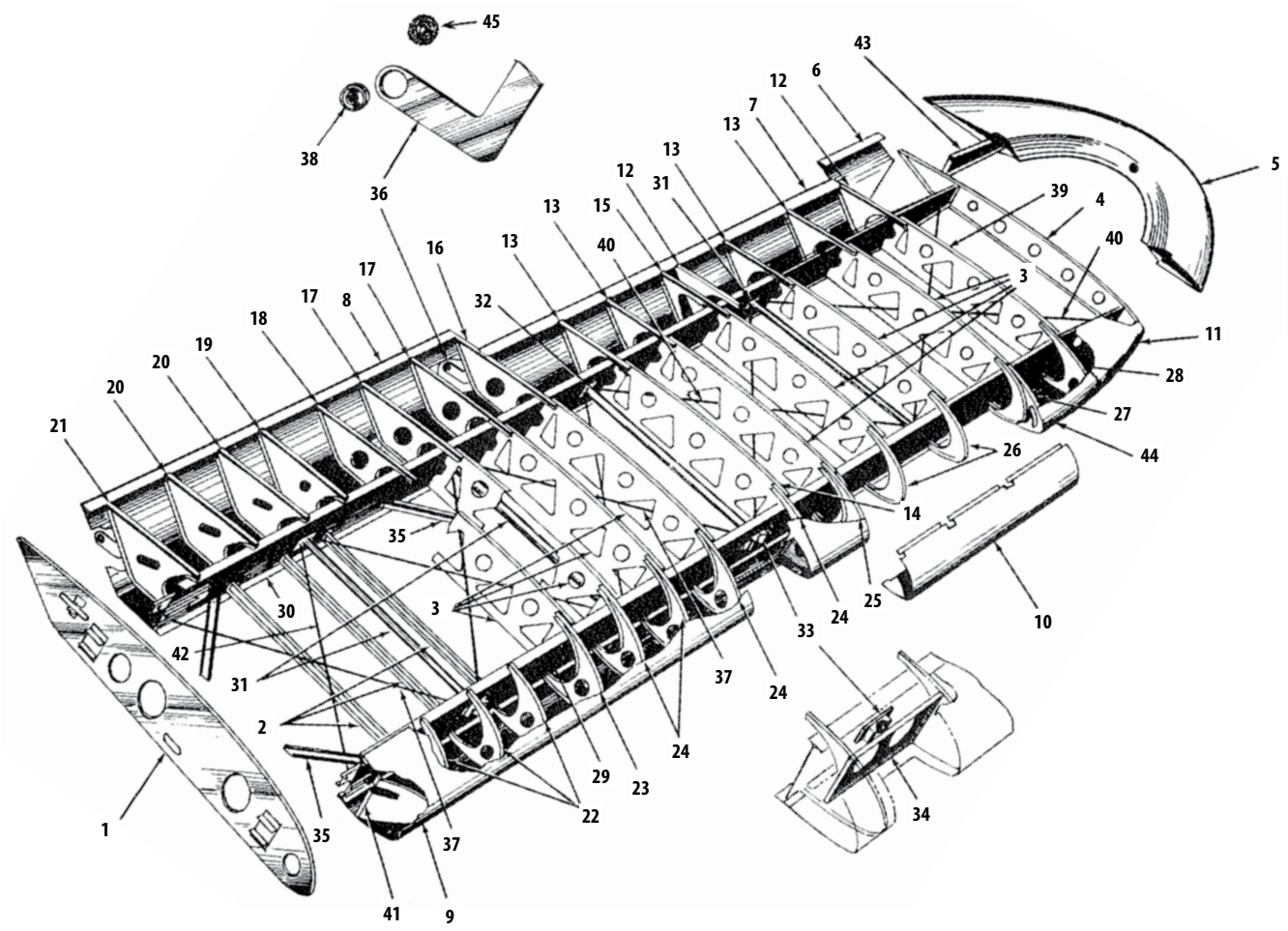

Engine Conversion Kits

Univair holds STC approval SA2718NM for the O-360 series Lycoming engine (180hp) for the 108, 108-1, 108-2, and 108-3 Stinsons. Univair also holds the STC for the IO-360 series engine (200hp) for the 108-3. These engines offer increased performance, a 2,000 hour TBO for the 0-360, an 1,800 hour TBO for the IO-360. Besides an improvement in TBO over the original Franklin engines, these engines offer greater serviceability. They run on the more readily available 100LL avgas and are two of the most popular engines in use in general aviation today. Univair can supply for these conversions: engine mounts, baffles, exhaust systems, propellers and various detail parts, including rudder bungee and ½ inch fuel lines when required. Univair can supply all necessary ½ inch fuel line components except the fuel valve.

Performance Information

Univair publishes no performance data for either of these engine conversions. The supplemental flight manuals for these installations do state that these conversions will deliver the same or better performance than what the aircraft was originally certified for. Neither of these engine conversions allow for an increase in gross weight.

Customers who have installed wither the 180hp or 200hp engine conversions have noted significantly better climb and short field performance especially with a climb propeller in the case of the 180hp installation. The same is true with the Hartzell constant speed propeller and 200hp installation on the 108-3. Customers have reported modest increases in airspeed with both installations. A greater increase in speed has been reported on the 108-3 with the 200hp installation compared to the 180hp installation. The original maximum structural cruise speed limit remains the same after the engine conversions.

More details on Stinson engine conversion kits can be found on our website

UNIVAIR AIRCRAFT CORPORATION
2500 Himalaya Road, Aurora, Colorado 80011

November 12, 1963

STINSON SERVICE INFORMATION LETTER NO. 74A

Installation of Franklin 6A4-165-B3 165hp Engine and Rudder Bungee on Stinson 108 and 108-1 airplanes.

The following information is applicable to such a change:

1. The original aircraft frame and engine mount for Models 108, 108-1, 108-2 and 108-3 are structurally satisfactory for this installation.

2. Models 108 and 108-1 will require installation of revised fuel system as shown in Stinson Drawing 108-6222100 "G". This includes increasing fuel line and fittings to ½ inch.

3. The original center of gravity range, gross weight and airspeed limits are retained.

4. Model 108 and 108-1 will require installation of rudder bungee in accordance with Drawing 108-3042450.

5. Cowling and baffles as shown in Drawing 108-6021401 "L" and 108-6221201 "H" are required for the 165hp engine.

6. Propellers as listed in Specifications A-767 as eligible for the Model 108-2 are satisfactory for use on the modified aircraft.

7. Installation of this engine may be made on the basis of this letter by the local A & P mechanic with the usual FAA 337 form. The Flight Manual Revision, supplied with kit, should be placed in the aircraft.

8. Re-mark tachometer to red line at 2800 RPM, cylinder heat to 530°F for spark plug type thermocouple, 445°F for bayonet type thermocouple.

9. This installation is eligible on the land plane, sea plane, and ski plane version.

Robert M. Williams
STINSON SERVICE DEPARTMENT

FAA APPROVED Rocco Rizzo
DATE Nov. 18, 1963

165 Franklin vs. 180/200 Lycoming

165 Franklin			180 Lycoming			200 Lycoming	
% Power	Output	Fuel Consumption	% Power	Output	Fuel Consumption	Output	Fuel Consumption
82%	135hp	10.5 gph	75%	135hp	10.5 gph	150hp	10.4 gph
75%	123hp	9.7 gph	68%	122hp	9.5 gph	137hp	9.4 gph
71%	117hp	9.3 gph	65%	117hp	9.0 gph	130hp	9.1 gph
65%	107hp	8.6 gph	61%	110hp	8.4 gph	123hp	8.5 gph
			55%	99hp	7.4 gph	110hp	7.5 gph

Lycoming O-360 Series • 180hp

Our STC covers the installation of the O-360 series* 180hp Lycoming engine with fixed-pitch Sensenich propeller for the entire 108 series of Stinsons. The ⅜ inch fuel lines in the 108 and 108-1 will have to be replaced with ½ inch fuel lines. This will require a modification of the fittings on the fuel tanks. Univair can supply all the necessary ½ inch fuel line components with the exception of the fuel valve. Also, the 108 and 108-1 will require the Rudder Bungee Kit if not already installed. Neither the fuel lines or Rudder Bungee Kit are included in the Minimum or Detail kits listed below; they must be purchased separately from Univair. The 108-2 and 108-3 already have ½ inch fuel lines. The 108-2 will also have the Rudder Bungee Kit already installed. The 108-3 does not require the Rudder Bungee Kit as it has a rudder with a pilot adjustable trim tab.

This engine conversion will allow the use of the existing cowling requiring some modifications to the nose and lower cowl.

Below are lists of major items that we require as a minimum of purchased parts from Univair. These Minimum Conversion Kits will be sold only as a complete package. Other "detail" items are needed for the installation. However, they may be purchased individually from Univair or from other vendors. These include items such as controls, ducting, hoses, etc.

Note: In developing this STC installation, Univair used the narrow (standard) deck engine. Installations using the later wide deck engines may require minor modifications to the baffling.

* O-360 engines approved for this STC are O-360-A1A, -A1D, -A1F, -A1F6, -A1F6D, -A2A, -A2D, -A1AD,-A2E, -A2F, -A3A, -A3AD, -A4AD, -A4M, and -A5AD

Kits for O-360 180hp Conversion

Minimum Kit (See List Below) ..... 180MK..... **$16,774.75**
Detail Kit (See List Next Page)..... 180DK.....**$6,473.57**
Sensenich Propeller 76EM8 Series.....**CALL**
Rudder Bungee Kit*..... 108-3042450.....**$2,905.56**

* Required for 108 and 108-1

Customers with wide deck engines who wish to convert from a generator to an alternator can purchase the 015-01236WD Alcor Alternator Kit from InterAv (phone 210-344-2785). The adjustment bracket supplied in this kit is not applicable; however that bracket (108-U9001062) can be supplied at no additional charge upon request.

180MK Minimum Kit $16,774.75

This kit includes the parts listed below. Engine not included.

Description	Quantity	Part #
Engine Mount	1	108-U-9001023
Baffle Set	1	O-360
Oil Cooler	2	8000075
Oil Cooler Take Off	1	108-U-9001024
Spinner Assembly	1	U14422-B
Carburetor Air Box	1	108-U9001059
Exhaust Manifold	1	108-U9001064
Muffler Assembly	2	108-U9001015-3A
Shroud	1	108-6222209-20
Shroud	1	108-6221210-20
Shroud Clip	2	108-6221704
Flame Tube	2	108-U9001061
Bracket	1	108-U9001062
Muffler Hanger	2	108-6221710
Leather Gasket	1	11950-004
Oil Pressure Tube	1	108-U9001002-2
Fuel Line	1	108-6222101-10
Oil Cooler Tube	1	108-U9001002-56
Oil Cooler Tube	1	108-U9001002-57
Oil Cooler Tube	1	108-U9001002-58
Eyebrow	1	108-6022421
Alternator Adjustment Arm	1	108-U9001051
Alternator Belt	1	3L320
STC Paperwork and Blueprints	1	SA2718NM

180DK Detail Kit $6,473.57

This kit includes the items listed below, or they can be purchased separately.

Description	Quantity	Part #	Price
Oil Pressure Line	1	108-U-9001008-2	**$91.59**
Aeroduct	2 ft	CAT16	**$15.75/ft**
Hose Clamps	2	20060S	**$7.07**
Tachometer Cable	1	TACH-37	**$154.00**
Aeroduct	1 ft	SCAT4	**$10.40/ft**
Aeroduct	2 ft	SCEET8	**$23.21/ft**
Aeroduct	8 ft	SCAT8	**$20.16/ft**
¾ inch Hose	3 ft	MIL6000-12	**$13.49/ft**
Elbow	1	49X8	**$12.03**
Button Lock Control	1	A700-10-0600	**$115.99**

Throttle Control	1	A750-10-0526	**$182.45**
Mixture Control	1	A750-20-0480	**$113.21**
Lord Mount	4	J7402-24	**$209.49**
Swivel	1	U70371-003	**$26.41**
Rod End	2	89307-000	**$52.95**
Air Filter Assembly	1	BA-4106	**$77.30**
Tail Pipe	2	108-U-9001011	**$1,034.18**
Baffle Air Scoop	1	108-U-9001055	**$456.70**
Muffler Clamp	2	108-U-9001058	**$79.18**
Hanger	1	108-U-9001053-00	**$51.76**
Hanger	1	108-U-9001053-01	**$51.76**
Cowl Reinforcement Ring	1	108-U-9001050	**$42.25**
Bushing	1	108-U-9001065	**$8.64**
60-0-60 Ammeter	1	82311	**$62.98**
Fitting	1	AN816-8D	**$8.72**
Fitting (AN822-8D)	2	MS20822-8D	**$89.71**
Fitting (AN823-8D)	3	MS20823-8D	**$28.20**

Lycoming IO-360 Series • 200hp

Applicable on Stinson 108-3 Only

Univair holds STC approval SA1552NM for the installation of the IO-360* 200hp engine conversion with Hartzell constant speed propeller on the Stinson 108-3. This conversion is simple and a direct replacement of the Franklin 165hp engine and related accessories with a more modern, fuel efficient and more powerful Lycoming IO-360 series engine package.

This conversion retains the existing lower cowling; however, it must be modified. A new deeper nose cowl and longer side cowling are required. A new fuel boost pump is required. Because of the installation of the constant speed propeller and related accessories, the battery box must be relocated behind the baggage compartment.

There are standard and wide deck versions of the Lycoming IO-360. To insure that we provide the proper parts for your installation, we need to know which version you have. Information on how to determine this is on page 166.

Below is a list of major items required for this installation as contained in the Minimum Conversion Kit. This kit will only be sold only as a complete package. Other "detail" items needed for the conversion such as controls, ducting, hoses, etc., can be purchased individually.

Note: In developing this STC installation, Univair used the narrow (standard) deck engine. Installations using the later wide deck engines may require minor modifications to the baffling.

* IO-360 engines approved for this STC are IO-360-A1A, -A1B, -A1B6, and -A1C

Kits for IO-360 200hp Conversion

Conversion Kit

200hp Minimum Kit (See List Below)	200MK	**$15,448.92**

All Metal Bottom Cowl for 200hp Conversion

Bottom Cowl	108-U-9001040	**$2,864.58**

Hartzell Propeller and Accessories

Hartzell Propeller (HC-C2YK-1BF/F7666A-Z)	81-C2K00040	**CALL**
Governor	H1	**CALL**
Hartzell Spinner Assembly	835-44	**CALL**

Customers with wide deck engines who wish to convert from a generator to an alternator can purchase the 015-01236WD Alcor Alternator Kit from InterAv (phone: 210-344-2785). The adjustment bracket supplied in this kit is not applicable; however that bracket is supplied in the Minimum Conversion Kit at no additional charge.

200MK Minimum Kit $15,448.92

This kit includes the parts listed below. Engine not included with kit.

Description	Quantity	Part #
Engine Mount	1	108-U-9001023
Baffle Set	1	108-U-9001020
Oil Cooler	2	8000075
Oil Cooler Take Off	1	108-U-9001024
Side Cowl Assembly	1	108-U-9001032
Nose Cowl	1	108-U-9001033
Bottom Cowl Modification Kit	1	108-U-9001040KIT
Muffler Assembly, Left	1	108-U-9001015-3A
Muffler Assembly, Right	1	108-U-9001015-4A
Shroud	1	108-6222209-20
Exhaust Manifold	1	108-U-9001034
Shroud Clip	2	108-6221704
Flame Tube	2	108-U-9001010
Tailpipe Hanger Kit	1	108-U-9001016KIT
Alternate Air Box Assembly	1	108-U-9001019
Auxiliary Fuel Pump	1	1500-00-44
Baffle Bracket Kit	1	108-U-9001021KIT
Alternator Drive Belt	1	8368
STC Paperwork and Blueprints	1	SA1552NM

Detail Parts for 200MK Installation

Parts listed below must be purchased separately.

Description	QTY	Part #	Price
Tailpipe, Left	1	108-U-9001013	**$389.27**
Tailpipe, Right	1	108-U-9001014	**$389.27**
Oil Cooler Flange Fitting	1	108-U-9001024	**$174.63**
Auxiliary Fuel Pump Bracket	1	108-U-9001003	**$102.83**
Governor Control	1	A750-10-0290	**$105.98**
Throttle Control	1	A750-10-0526	**$182.45**
Mixture Control	1	A750-20-0600	**$117.94**
Alternate Air Control (032-22)	1	—	—
Throttle Bracket	1	108-U-9001004	**$56.91**
Tachometer Cable	1	TACH-37	**$154.00**
Ignition Switch for Non-Impulse Coupled Mags	1	10-357200-1	**$661.42**
Battery Box Relocation Kit	1	U-108-3062020	**$739.41**
60-0-60 Ammeter	1	82311	**$62.98**
Manifold Pressure/Fuel Flow Gauge	1	—	—
Lord Mounts	4	J7402-24	**$209.49**
Electrical Wiring, Complete Set	1	108-U-9001007KIT	**$439.96**
Engine Hose Kit	1	HOSE-KIT	**$1,306.04**
Air Filter Assembly	1	BA-5110	**CALL**
Ignition Vibrator Starter	1	10-176487-121	**$651.00**